PRECIPITATION-STRENGTHENED AND MICRO LAYERED BULK COPPER- AND MOLYBDENUM-BASED NANOCRYSTALLINE MATERIALS PRODUCED BY HIGH-SPEED ELECTRON-BEAM EVAPORATION–CONDENSATION IN VACUUM:

N. I. Grechanyuk, V. G. Grechanyuk, A.F.Manulyk

SYNERGY ANTECH SERVICES CORP. 32 Bill Hutchenson Crescent, Bowmanville, ON, L1L7E1, Canada, a.mnulyk@synergyntech.com;

SPC ELTEHMASH Bldg. 25, Vatutin St., Vinnytsia, Ukraine Postal Code: 21011, eltechnic777@ukr.net

Keywords: rapid evaporation-condensation, copper, molybdenum, vacuum, precipitation-strengthened materials, layered materials, bulk materials.

ABSTRACT

The phase composition and structurization of three types of copper and molybdenum composite materials, 0.8 to 5 mm thick, were condensed from the vapor phase at substrate temperatures 700 and 900 ^{0}C. They are considered: precipitation-strengthened composites, micro layered composites with alternating copper and molybdenum layers 1 to 10 µm thick, and bulk nanocrystalline composites with alternating layers thinner than 0.5 µm. Standard precipitation-strengthened Cu- and Mo-based materials condensed from the vapor phase at substrate temperatures 700–900 ^{0}C can be produced over the strengthening phase's relatively narrow composition range (0.1–3 wt.% Mo). When Mo content is 3–5 wt.%, the molybdenum particles change their shape from round to acicular in chains form oriented perpendicularly to the vapor flow. If more than 5 wt.% of the second phase, the condensed composite materials (CCMs) show a layered structure. The layered structure can be observed in other CCM types (Cu–W, Cu–Cr, NiCrAlTi– Al2O3). Layered copper and molybdenum CCMs, 6 mm thick, produced on a rotating substrate heated to 700 ± 30 ^{0}C have been experimentally confirmed to belong to bulk nanocrystalline materials.

INTRODUCTION

In the present day, the high-temperature electron-beam evaporation of metals and non-metals is widely used to protect coatings on the different technical parts [1–3].

Creation of new materials obtained from highly condensed vapor torrents on preheated in advance at necessary temperature substrate, their structures, and properties studying with fields of their applications are summarised in publication [4].

However, suppose the thin film and their thin-film composites have a wide application in modern technology [5]. The formation of a thick (10 µm – 100 µm and more) nanostructure with a high quantity of uniform layers, obtained at a substrate temperature of more than 300 ^{0}C, has many obstacles.

These difficulties are explained by the destruction of nanostructure layers, growing grains at the high condensation temperature. The third factor is a turning nanostructured composition to the typical polycrystal materials.

An excepted complex of physic-mechanical properties in bulk condensed systems is possible to get with the condition when substrate temperature at condensation process is equal or not more than 0.3 of the melting points of the lowest melting component [6].

At present, thermodynamically non-equilibrium but kinetically stable at the high-temperature materials are the methods of manufacturing multicomponent, multilayered, gradient, dispersed, and dispersed reinforcement structures.

The thermodynamic and kinetic compatibility of the components inside the composites (CM) were the main factors of the research object. The thermodynamic equilibrium of matrix and reinforced elements at the manufacturing and exploitation temperatures is the dominant factor. [7].

Kinetic compatibility is the ability of the components CM to be at the condition of metastable equilibrium, which is controlled by absorption, diffusion speed, chemical reaction speed, and s.t.r. Chemical compatibility should be supported by mechanical compatibility of CM such as closed values of elasticity and thermal expansion liner coefficient (CLTE) for CM that allows reaching solid connection, necessary for the effective tension transition through separation surfaces. Some of the CM, such as Cu-Mo, Cu-W have thermodynamic and kinetic compatibility.

At the option of CM choice, the specificity of high-speed evaporation-condensation of initial components

(copper, molybdenum, tungsten), composition of the films oxides in similar powder compositions, as well as fields of similar condensed composition materials (CCM) application takes place.

Analyze the literature [8-10] and previous research of thick vacuum condensates of the metallic and non-metallic materials [11] followed by the Cu-Mo system choice for the CCM studding.

EXPERIMENTAL PART

The copper ingots (diameter of 98.5 mm), and molybdenum ingots (diameter of 68.5 mm), length up to 450 mm after vacuum-arc remelting, were used for evaporation. The purity of all components was not less than 99.5% - 99.7% weight. The substrates were made of carbon steel with surface roughness not less than Ra=0.63 according to the GOST 2759-73.

Composition materials were manufactured according to the three technological schematics: (fig.1):

- The deposition on a static substrate with 700x400x15 mm by evaporation and condensation of initial components from two independent sources with variable copper and molybdenum concentration along the substrate. The concentration of the molybdenum variates in the range of 0.1 % -0.6 % weight at the temperature of 700 ^{0}C. And 0.4 % to 46.7 % weight at the temperature of 900 ^{0}C.
- On the rotated with the speed 36 rev/min substrate with the diameter of 800 mm and thickness 25-30 mm by the Cu and Mo condensation from two independent sources without vapor torrents separation.
- On the rotated with speed 1-10 rev/min substrate with the diameter of 500 mm and thickness 25-30 mm by the Cu and Mo condensation from two independent sources with vapor torrents separation.

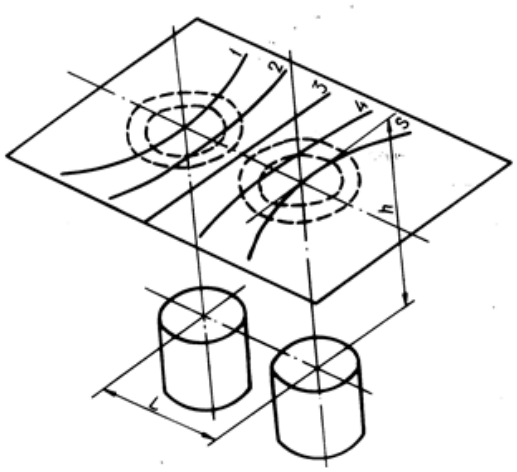

a

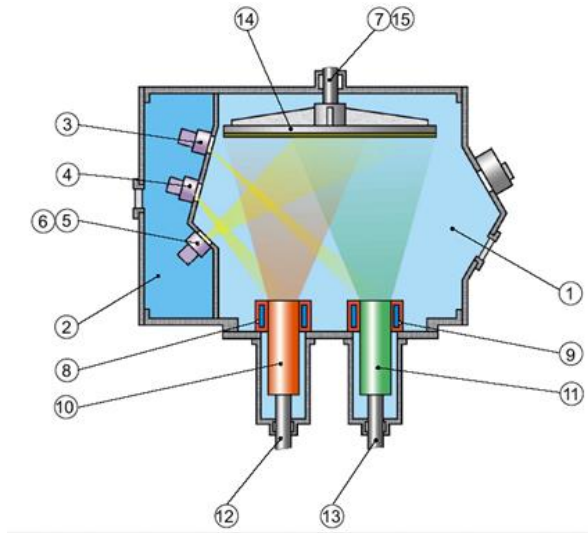

b

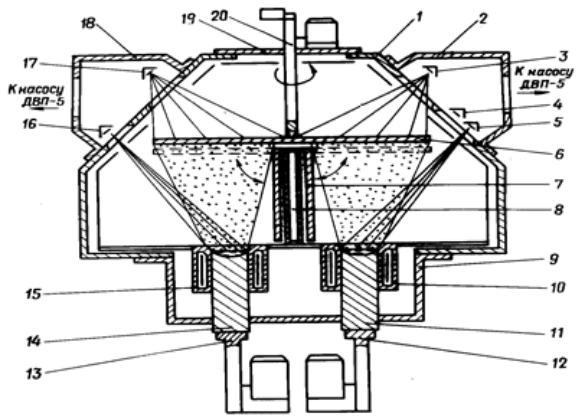

c

Fig.1. Technological schematic of CCM Cu-Mo system obtaining on the

a- Static substrate (1,2,3,4,5 -lines of constant components concentration along the width of the substrate.

b- On the rotated substrate without vapor torrent separation (1-working chamber; 2-e-guns chamber; 3-,4,5,6 -electron-beam heaters; 7-substrate heaters; 8,9 – water-cooled copper crucibles; 10,11 – initial materials; 12,13 ingots feeding mechanisms; 14-substrate; 15-rotating mechanism of the substrates;

c- On the rotated substrate with separation of vapor torrents (1 -working chamber; 2,18 chambers of electron-beam heaters; 3,17,4,5,16 electron-beam heaters itself; 6 – substrate; 7- water-cooled copper shield for vapor torrent separation of the copper and molybdenum; 8- cooled liquid (water); 9-chamber; 23,13 ingot feeding mechanism for the ingot supply to the evaporation zone; 10,15 water-cooled crucibles; 11,14 evaporated ingots; 19,20 the fixing lead and substrate rotated mechanism

The substrate is heated in advance up to 700^0 +_ 30 ^{0} C before condensate formation. A separation layer of CaF_2 is deposited on the substrate, the choice of which is explained by low cost and water solubility in hot water [12].

Copper evaporation is realized through the mediator pool [13]. This technological trick is to 2- or 3-times copper evaporation speed increase and, at the same time to decrease the microdroplet phase in vapor torrent. The speed of copper deposition variated in the range of 6µm/min-60µm/min and the speed of molybdenum variated from 3µm/min to 10 µm/min. On the rotated substrate from 3 µm/min to 20 µm/min without vapor torrents separation and from 1 µm/min to 3.5 µm/min with vapor torrents separation accordingly. Complete yttrium and zirconium contain in Cu-Mo condensed materials was not more than 0.1% of the weight.

CCM materials for the analysis were rectangular flat sheets with sizes 700x400mm and in the cylindrical form, Ø 500 mm x 800 mm, the thickness was 0.8µm-5 µm. The Chemical and phase composition of CCM were detected according to the methods described in the work [14].

DISCUSSION

X-ray phase analyses showed that all investigated compositions except primary copper and molybdenum have slight dispersions inclusions (up to 3% of the weight of all quantity of phase reinforced) of CuO and MoO_3 . It is proof that in a working vacuum $3x10^{-2}$ – $5x10^{-3}$ Pa, composition elements are partially oxidated by residue gases existing in the functional space, where evaporation and condensation occur.

Studying the Cu-Mo CCM micro-structure with a 6% weight containing a high-temperature melting phase at the substrate deposition temperature 700 ^{0}C-900 ^{0}C shows that the presence of the crystallized surface leads to the whole surface micro-droplets of metal threw out from molten metal pool (fig.2.). Micro-droplets quantity changes and can reach $1x10^{-6}$ m^2 at the maximum deposition speeds.

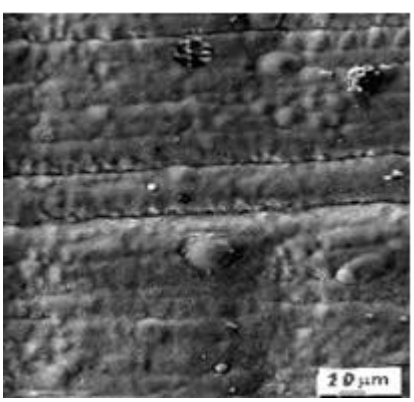

Fig.2. Morphology of the CCM surface with Cu -6 % weight of Mo.

The composition of Cu-Mo with 3 % of weight high-temperature melting phase has a typical disperse-reinforced materials structure with the formation of the wicked layer. The condensates have a characteristic column structure (fig.3). The crystals protruded along to the direction of the vapor torrent and were almost perpendicular to the condensation surface. The most intensive grain coarsening of the matrix occurs at a small concentration of the second phase (up to 1 % weight).

The coarsening of grain takes place at lower deposition temperatures. The example can be condensates obtained at substrate temperatures 500 ±30 ºC, 700± 30 ºC and 900± 30 ºC with reinforced phase 2 % of weight the average grain sixes and sizes of disperse particles are equal accordingly to 1.45, 2.0,e 7.0 µm and 12,27,53 nanometers [15]. In such condensates, the structure of the material, based on XRD analyses, presents in the two main phases: FCC structure on Cu base and BCC structure on the Mo base. In this case, the tendency to the firm dissolution of Mo lines and their shifting to more prominent angels is characteristic of the materials with nanoparticles.

а б

Fig.3. The microstructure of condensed materials a)– Cu-1,2% weight of Mo (x 600); b) – Cu-(6-12) % weight of Mo (x 6000); c) - Cu – 46,7 % weight of Mo

The structured character is changing at the condensates containing Mo of 3 % weight – 6 % weight.

The Mo particles in such condensates increase and create chains and conglomerates oriented at the parallel of

the material surface. The distance between chains decreases with the growth of the high temperature melting phase concentration.

Condensed Cu-Mo composition materials with high temperature melting phase concentration from 5 % weight to 12%-15 % of weight have the main point of difference as combine layering, where solid layers (dark zones) interchange with separate (light zones) (fig 3, b), with Molybdenum concentration growth saturation of the layers, elements, not uniformity, elements not uniformity of reinforced phase expand in the material volume. (fig.3,b).

The metallographic investigation found that all micro-layered condensates of the Mo layers are from 1.0 µm to 4 µm having column structure. The high of Mo column crystals is correlates to the thickness of the layer. The matrix copper layers are from 1.3 µm to 10 µm consist of practically equal axel grains with a large quantity of twinning. Mo-bearing layers and matrix Cu layers explain the specific difference in the crystal structure of copper and molybdenum micro-layers.

CONCLUSION

1. The method of rotated substrates with separated evaporation of the components for the binary and many-component alloys of particular composition is characterized by high efficiency of vapors usage and almost removing column structure, which sometimes leads to the cracking and porosity increase. Column structure does not appear as the angle of vapors falling on the substrate constantly changes. It is possible to create different structure types through geometrical crucibles location, substrate rotation speed, and speed of initial components evaporation.

2. The main technological factors influencing the layered structure are substrate rotation speed and the component's deposition speed. The structure stability regulates by the thickness of interchangeable layers and condensation temperature. At a similar CM, a location geometry of evaporation crucibles and the substrates' location relative to crucibles is essential. From this is following, the interchangeable layers on the copper base consist of a low alloyed alloy of copper (Cu-Zr-Y), reinforced by dispersed particles of Cu, CuO, and Mo.

3. The complex chemical and XRD analyses showed that reinforcement by dispersed particles helps structure coarsening with the rising of layers' thermostability. It reduces the level of tension existing due to the difference of the Cu and Mo coefficients of the linear thermal expansion. At the same time, slow transition from one element to the next diminishes layers' destruction at the high condensation temperature.

LITERATURE

1. B. A. Movchan and K. Yu. Yakovchuk, "Electro-beam units for evaporation and deposition of inorganic materials and coatings," *Spets. Elektrometall.*, No. 2, 10–15 (2004).
2. N. I. Grechanyuk, P. P. Kucherenko, and I. N. Grechanyuk, "New electron-beam equipment and technologies for producing modern materials and coatings," *Avtomat. Svarka*, No. 5, 36–41 (2007).
3. N. I. Grechanyuk, P. P. Kucherenko, A. G. Melnik, et al., "New electron-beam equipment and technologies for producing modern materials by melting and evaporation in vacuum developed by Eltekhmash Research and Manufacturing Company," *Avtomat. Svarka*, No. 5–6, 53–60 (2016).
4. N. I. Grechanyuk, "Capabilities of electron-beam production of composite materials," in: *Electrical Contacts and Electrodes Series (Collected Papers)* [in Russian], Inst. Probl. Materialoved. NAN Ukrainy, Kyiv (2010), pp. 44–53.
5. S. I. Sidorenko, "Limit states in thin metallic films," in *Inorganic Materials Science. Fundamentals of Materials Science* [in Russian], Naukova Dumka, Kyiv (2008), Vol. 1, pp. 459–481.
6. B. A. Movchan and A. V. Demchishin, "Study of the structure and properties of thick vacuum condensates of nickel, titanium, tungsten, and alumina," *Fiz. Met. Metalloved.*, **28**, No. 4, 653–660 (1969).
7. D. M. Karpinos (ed.), *Composite Materials: Handbook* [in Russian], Naukova Dumka, Kyiv (1985), p. 591.
8. Yu. V. Naidich, *Contact Phenomena in Metal Melts* [in Russian], Naukova Dumka, Kyiv (1972), p. 196.
9. L. I. Maissel and R. Glang, *Handbook of Thin Film Technology*, McGraw-Hill, New York (1970).
10. G. G. Gnesin (ed.), *Sintered Materials for Electrical Engineering and Electronics: Handbook* [in Russian], Metallurgiya, Moscow (1981), p. 343
11. V. Demchishin, *Structure and Properties of Thick Vacuum Condensates of Metallic and Nonmetallic Materials and Scientific Principles for Their Production* [in Russian], Author's Abstract of ScD Thesis, Kyiv (1981), p. 35.
12. N. I. Grechanyuk, V. A. Osokin, I. N. Grechanyuk, et al., "Copper and molybdenum composite materials for electrical contacts condensed from the vapor phase. Structure, properties, and technology. II. Fundamentals of electron-beam technology for producing materials for electrical contacts," *Sovr. Elektrometall.*, No. 2 (83), 9–19 (2006).
13. B. A. Movchan, V. A. Osokin, L. V. Pushechnikova, and N. I. Grechanyuk, "Electron-beam evaporation of copper through an intermediate bath," *Probl. Spets. Elektrometall.*, No. 3, 58–61 (1991).
14. V. G. Grechanyuk, *Physicochemical Principles for Producing Copper-Based Coatings from Composite Materials Condensed from the Vapor Phase* [in Ukrainian], Author's Abstract of ScD Thesis, Kyiv (2013), p. 40.
15. . I. Grechanyuk, V. I. Topal, B. A. Movchan, and T. A. Molodkina, "Structure and properties of thick Cu–Mo condensates," *Spets. Elektrometall.*, No. 60, 38–43 (1986).