Preparation of charged droplets via electro-hydrodynamic spraying of polyelectrolyte solutions for the removal of floating particles with less than 10 um (PM10)

K. Lee, K. I. Lee and S. Kim*

*Korea Electronics Technology Institute, Nano Materials & Components Research Center
#25, Saenari-ro, Bundang-gu, Seongnam-Si, Gyeonggi-do, 13509, Korea, ksunmin@keti.re.kr

ABSTRACT

Ambient air quality tends to be worse due to the particle pollution in the region where the rapid commercialization is going on. Particulate matter (PM) describes fine inhalable particles with the specific diameter and smaller, and air quality monitors measure concentrations of PM throughout certain area. Generally, high-concentrated particles in atmosphere can be harmful to human health and fine particles, called PM2.5, are more dangerous because they can get into the deep parts of human organisms or even into the blood. Due to environmental concerns, various dust collection systems (cyclonic separators, filters, wet scrubbers, electrostatic precipitators) are applied for the degradation of fine particle concentration. These system have each pros and cons but they commonly need more energy or resource to maintaint the efficiency as the particles size become smaller. In this study, electro-hydrodynamic spraying process is applied in an air-flowing chamber system in order to generate very small charged liquid droplet which is used for the enhancement of particulate material aggregation on the surface of droplets. The spraying process is based on the phenomena that conductive liquids pushed through a thin capillary may form conically shaped menisci as a result of electrostatic forces and surface tension when an electrical field is applied. We investigate the formation of various size of charged droplets at optimal electric conditions by using the specific polyelectrolyte solution. Droplet formation phenomena at the single-tip nozzle are also monitored by high speed camera and the morphology of charged droplets is correlated with polyelectrolyte solution parameters such as surface tension, viscosity, conductivity.

Keywords: electrohydrodynamic, spraying, fine particles, polyelectrolyte, droplets

1 INTRODUTION

Ambient aerosol particles generally include solid particles (carbonaceous, ionic, and elemental species) and liquid droplets which are suspended in air or another gas. Exposure to these materials have become a serious issue in the view of indoor and outdoor air quality. Lots of health studies have indicated a resonable association between elevated concentration of fine particles in air, and human health effects [1-3] and reduced life expectancy. In the most polluted areas, the loss of life expectancy may be up to 2 years, or enve higher [4].

Particle less than 100um is termed as particulate matter which is classified by its aerodynamic diameter. Less than 10um size of particles (PM10) are considered to be highly dangerous because it could be inhalable into the lungs and induce adverse health effects. Recently, particulate matter with diameter less than 2.5 um is considered as better predictor of respiratory and cardiovascular diseases due to its ability to penetrate deep into the lungs. Those fine particles sometimes cause air pollution problems in urban area and the relation between meteorological phenomena such as haze and PM2.5 was severely investigated [5].

Due to growing environmental concern and strictly-enforced regulations, reducing exposure to fine airborn particles such as dust, smoke, bacteria or spres has become a severe problem and various industrial techniques are applied for the reduction of particulate matter (PM10 or PM2.5) concentration in atmosphere. Mostly used conventional systems are cyclones, electrostatic preciptators, scrubbers, and filters. Each method has pros and cons, so must be selected by type of target particle characteristics: size, density, surface properties, and mechanical and chemical properties [6]. Although the filter media could be used to remove the fine particels easily, it is not recommended to handle the large amoung of capacity because of sudden decrease of removal efficiency from clogging. Filter system generally requires the frequent changes of filter media, which inevitably results in the increases of both maintenance and operating cost. Electrostatic precipitators (ESP) are more commonly used for the removal of particles > 1um. However, particulate matter with high resistivity cause dust build up due to back corona effect, whereas conductive particles may reverse their charge and result in reentrainment. ESP inherently has some limitaion of its application: 1) it needs more complex equipment and installation, 2) there is coetain requirement for particle resitivity for high removal efficiency (particle resitivity 10^4 ~ 10^{11} Ω cm), 3) it is affected by operating conditions (humidity, temperature, velocity, etc.).

As an alternative among other conventional methods, advanced wet scrubber techniques were investigated combined with wet electrostatic precipitator or indenpendently[7]. Wet scrubber generally operates based on three main mechnism: Brownian diffusion, interception,

and inertial impaction [8,9]. Most of conventional wet scrubber perform removal of fine particles with low efficiency and various modifications were tried by imposing additional electrostatic forces upon particles by means of particle-charging, or droplet-charging, or evne opposite-charging of both of them. Those previous researches can be classified by droplet formation methods which are manipulated by pneumatic atomizer[10], rotary atomizer[11], two-fluid atomizer[6,12], and electro hydrodynamic spraying[13]. Modeling and theoretical analysis for better removal efficiency of fine particles were also tried for long time [14,15]. Previous approaches commonly try to improve the low efficiency for small particles by the formation of small charged droplets, but the intrinsic issue of high liquid consuption by these system was neglected. Droplets made by electrospraying could be evaporated if it is as small as 1um, or falling to ground easily if it is larger than 100um. Only few experiemental research about the formation of stable droplets with the specific size for the removal of PM10 and PM2.5

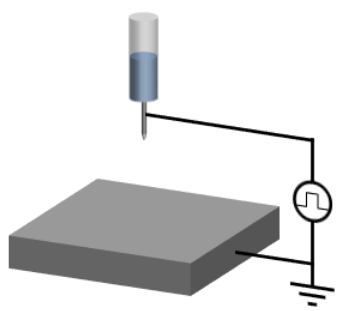

Figure1: Concept of droplet formation by electrohydrodynamic device.

In this study, droplet formation with moderate size between 50 to 150um is achieved by electrohydrodynamic device and various electrolytes are used for stable meniscus at the tip of nozzle. Small charged droplets generated from this device are manipulated by applied voltage, the distance between nozzle and ground-electrode. Continuous droplet formation from the liquid meniscus is also controlled by process parameters and various liquid properties such as conductivity, viscosity, and surface tension.

2 EXPERIMENTALS

2.1 Materilas

Three electrolyte materials were prepared for the formation of enhanced charged droplet. KCl,

NaCl was used for the dust generation with size of submicron to over 10 micron by atomizer.

2.2 Electrolyte solution preparation and characterization

Solutions were prepared by mixing specific amounts of electrolytes with the deionized water as solvents and stirring for s at ambient temperature, pressure, and humidity.

For the meniscus formation study, viscosity, surface tension, and electrical conductivity were measures. Viscosity was measured using rotational viscometer (Spindel-41Z, Brookfield). Surface tension was measured using tensiometer (Sigma 700 - Attension, plate method). Electrical conductivity was estimated using conductivity probe (CM-30R, TOADKK). The prepared electrolyte solution properties are listed in Table 1.

	Viscosity (cP)	Surface tension (mN/m)	Conductivity (S/m)
DI water	1.1	69.8	3.52×10^{-4}
KCl 15%		71.4	15.2
$AlCl_3$ 15%		63.9	5.57
PSS 10%		54.4	1.7

Table 1: Physical properties of the electrolyte solutions tested in electrohydrodynamic device.

2.3 Charaterization of meniscus and droplet formation by electrohydrodynamic (EHD) spraying process

Particulate matter with the size of more than 100um is usually fall down to ground by gravity settiling effect. In general case of nonporous particles falling through a fluid phase, Stokes diameter D_s defined by Sokes' law as

$$D_s = \sqrt{\frac{18\mu V}{g(\rho_s - \rho_f)}}$$

Ds=Stoke's diameter

μ= fluid viscosity

V= final settling velocity

g= gravitational acceleration

ρs= density of particles

ρf=density of fluids

In the above equation, V is replaced by Reynolds number and maximum diamter of sedimented partilce is obtained as f

$$D_{max} = \left(\frac{18 Re\, \mu^2}{g \rho_f (\rho_s - \rho_f)}\right)^{1/3}$$

For the water droplets in the air, D_{max} is estimated around 33um. It means that the size of droplets for our purpose should be between 33um and 100um. Droplets were manipulated by the electrohydrodynamic spraying device which is composed of high voltage power supply

(SHV30R-10kV, ConverTech, Korea), syringe pump (NE-300, NewEra pumpsystem inc.), nozzle, and copper gate electrode. The distance between nozzle and electrode was adjusted by manual positioning system (OWIS, German) and the nozzle tip was connected from high voltage supply by electric wire. The nozzle tip and electrode was 3mm apart. Copper gate electrode was machined with the hole of 6 mm diameter nomal to the nozzle tip. The prepared electrolyte solution was ejected through the nozzle with inner diameter of 0.14mm. The electrohydrodynamic droplet formation process was performed in atmospherci conditions and the shape of menisci and the size of droplets were monitored by high speed camera with the resolution of 1280x800 and the maximum frame rate of 1 miliions per second

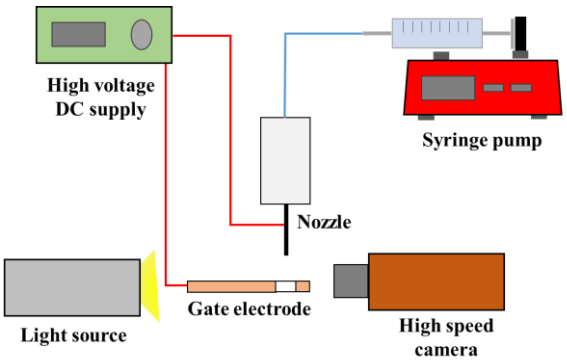

Figure 2: Schematic diagram of electrohydrodynamic spraying device.

3 RESULTS AND DISCUSSIONS

Various solutions were tested for stable droplet formation by electrohydrodynamic process. Monodisperse droplet formation using water is hardly achievable under atmospheric conditions by EHD due to low conductivity. So we prepared soome solution with high conductivities by adding various electrolytes and with high surface t ension by adding viscous materials. Among those materials in Table 1, KCl shows high conductivity and surface tension. We choose KCl as target solution for EHD process in order to prepare the monodisperse droplets with charged surface.

In the first, KCl solutions were prepared with different concentration from 10, 15, and 20%. Those solution were tested in the same condition and monitored for droplet formation phenomena by microdripping, spraying, pulsating. We also applied the positive charge and negative charge at the nozzle and obtained the meniscus image and droplet size using high speed camera. For the stable droplets ejected from nozzle, the microdripping was more preferable and the negative charge at the nozzle is more optimal.

KCl solutions with various concentration has high conductivity as the weight percent increased. However, the surface tension is converge from 15% so 15% KCl soltuion was selected and tested for various EHD process parameters including flow rate and applied voltage.

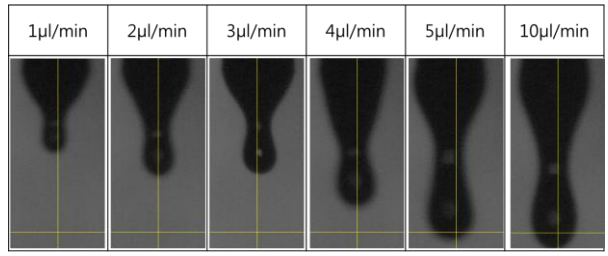

Figure 3. Elongated meniscus at the nozzle tip at various flow rate conditions with applied voltage of 3.0kV for 15% KCl solution

Meniscus elongation length and droplets size by EHD process were also compared at various flow rates and applied voltages only in case of microdripping phenomena. As shown in the results in Figure 4 and Figure 5, droplet size is more dependent on the flow rate than applied voltage and 15% KCl solution was ejected by EHD process in order to form the continuous droplets with similar size at 2.8-3.4 kV and 0.1-1ul/min where the droplets were formed by microdripping phenomena.

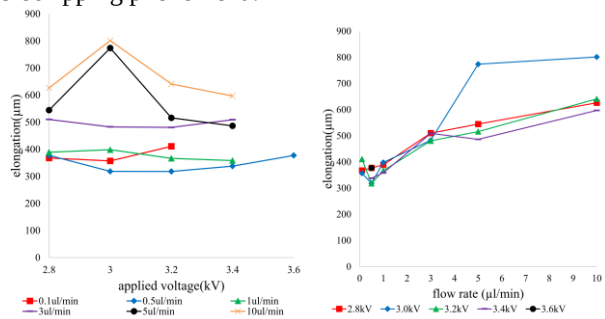

Figure 4. Comparison of meniscus elongation length as function of applied voltage (a) and flow rate (b)

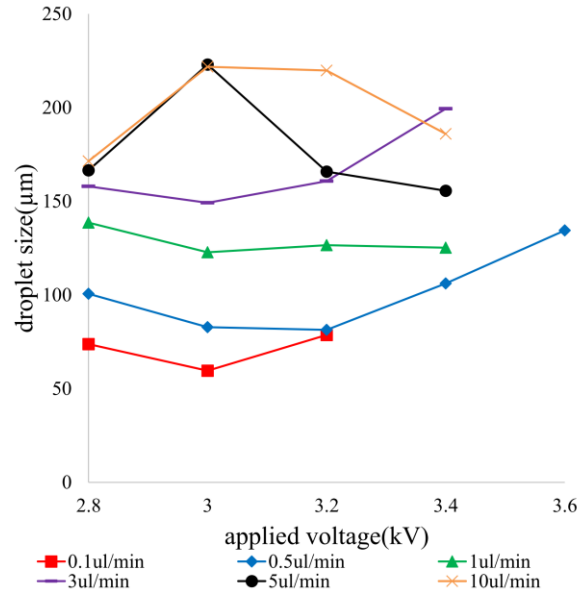

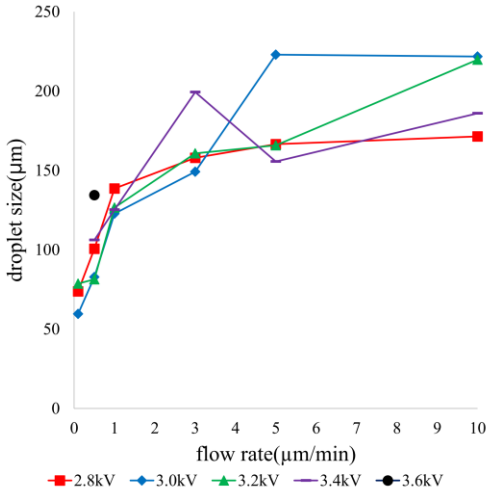

Figure 5. Compaarison of droplet size formed by EHD process as funcion of applied voltage (a) and flow rate (b)

In order to prepared the charged droplets by EHD process, the size and the stability of ejection process is important because, if the size of droplet is bigger than 100um, it easily fall down to ground and, if the size is smaller than 50um, the droplets is less charged and stcik to each others. We tried some elctrolyte solutions and tested EHD process in various process parameters including applied voltages and flow rates. The stable droplets with the size of 50-100um were obtained at the flow rate of 0.1-1 ul/min and the applied voltage of 2.8-3.4kV at the suggested experimental setups.

4 CONCLUSION

From our experimetal results, we demonstrated that the formation of the charged droplet with optimal size (50-100um) was achieved when using electrolyte materials. Generally, high conductive solution is more preferable to obtain the micro-dripping mode but other electrolytes except KCl affected the decrease of surface tension of solution which results in unstable droplet formation such as dripping or pulsating mode. The droplet size seem to be more dependent on flow rate than the applied voltage from our experimental results. This finding will be useful to investigate the optimal conductive solution for the formation of charged droplet by EHD process and various solvents and polymer electrolytes will be tested in the future works to obtain the buyont charged droplets for the application of ultrafine particles reduction.

Acknowledgements: This project is supported by Korea Ministry of Environment (MOE) as "Advanced Technology Program for Environmental Industry".

REFERENCES

[1] C. Pope and D. Dockery, "Health effects of fine particulate air pollution: lines that connect," J. Air Waste Manage. Assoc., 56, 709, 2006

[2] E. Oesterling, N. Chopra, V. Gavalas, X. Arzuaga, E. J. Lim, and R. Sultana, "Alumina nanoparticles induce expression of endothelial cell adhesion molecules," Toxico. Lett., 178, 160,2008

[3] L. Hsieh, S. Kuo, C. Chen, and Y. I. Tsai, "Size distribution of nano/micron dicarboxylic acids and inorganic ions in suburban PM episode and nonepisodic aerosol," Atmos. Environ., 43, 4396, 2009

[4] A. A. Economopoulou and A. P. Economopoulos, "Air pollution in Athens Basin and Health Risk assessment," J. Environ. Monit. And Assess., 80, 277, 2002

[5] G. Yu, Y. Zhang, S. Cho, and S. Park, "Influence of haze pollution on water-soluble chemical species in PM2.5 and size-resolved particles at an urban site during fall," J. Environ. Sci. , 57, 370, 2017

[6] W. Peukert and C. Wadenpohl, " Industrial separtaion of fine particles with difficult dust properties," Powder Technolgy, 118, 136, 2001

[7] D. X. Xu, J. W. Zhao, Y. Z. Ding, and W. L. Ge,"Removal of adhesive dusts from flue gas using corona discharges with spraying water," J. Environ. Sci. 15, 554, 2003

[8] H. T. Kim, C. H. Jung, S.N. Oh, K. W. Lee, "Particle removal efficiency of gravitational wet scrubber considering diffusion interception, and impaction," Environ. Eng. Sci. 18, 125, 2001

[9] P. Centner, H. Buettner, F. Ebert, "Investigation of a wet dust scruuber with a pneumatic nozzle: Dust collection based on turbulent iffusion," Chem. Eng. Technol. 12(1), 439, 1989

[10] L.F. Gaunt, J.F. Hughes, N.M. Harrison, "Removal of domestic airborne dust particles by naturally charged liquid sprays," J. Electrostatics, 58, 159, 2003

[11] W. Balachandran, A. Jaworek, A. Krupa, J. Kulon, M. Lackowski, "Efficiency of smoke removal by charged water droplets," J. Electrostatics, 58, 209, 2003

[12] B. RajMohan, R.K. Jain, B.C. Meikap, "Comprehensive analysis for prediction of dust removal efficiency using twin-fluid atomization in a spray scrubber," Separation and Purification Technol. 63, 269, 2008

[13] A. Jaworek, W. Balachandran, M. Lackowski, J. Julon, A. Krupa, "Multi-nozzle electrospray system for gas cleaning processes," J. Electrostatics, 64, 194, 2006

[14] H. Zhao, C. Zheng, "Modeling of gravitaional wet scrubbers with electrostatic enhancement," Chem. Eng. Technol. 31, 1824, 2008

[15] A. Jaworek, A. Krupa, A. T. Sobczyk, A. Marchewicz, M. Szudyga, T. Antes, W. Balachandran, F. D. Natale, C. Carotenuto, "Submicron particles removal by charged sprays.Fundamentals," J. Electrostatics 71, 345, 2013