Thermoelectric properties of molecular nanostructures

V.N. Ermakov*, S.P. Kruchinin*, Hyun Taki Kim** and T. Pruschke***

* Bogolyubov Institute for Theoretical Physics, NASU, Kiev 03680, Ukraine, skruchin@i.com.ua
** Metal-Insulator Transition Lab., Electronics and Telecommunications Research Institute, Daejeon, 305-350, Republic of Korea
*** Institut für Theoretische Physik, Georg-August-Universität Göttingen, Friedrich-Hund-Platz 1, 37077 Göttingen, Germany

ABSTRACT

We use the concept of resonant tunneling to calculate the thermopower of molecular nanosystems. It turns out that the sign of the thermovoltage under resonant tunneling conditions depends sensitively on the participating molecular orbital, and one finds a sign change when the transport channel switches from the highest occupied molecular orbital to the lowest unoccupied molecular orbital. Comparing our results to recent experimental data obtained for a BDT molecule contacted with an STM tip, we observe good agreement.

Keywords: thermoelectric, BDT molecule, tunneling

1 INTRODUCTION

Studies of the origin of a voltage or current in nanosystems in the presence of a temperature gradient are an extremely interesting and promising area in the field of nanotechnologies [1–3]. There are several important possible future applications in several areas of devices, among them the development of nanothermosensors (see, e.g., [4]), which is especially urgent for a number of technological processes and for research in biology concerning the functioning of life.

However, different from the classical description of thermoelectric phenomena, which is already challenging enough, the necessity to apply strictly quantum-mechanical methods in the realm of nano-objects makes the whole problem an extremely difficult one, and a proper theory for studying transport phenomena in the most general setup does not yet exist. However, for the description of most experimental realizations of thermoelectric transport through nano-structures, one can fortunately make some simplifying assumptions. Usually, one can consider the system to consist of two metallic structures, which are typically very good conductors and which we will call leads, that are spatially separated. Hence, there will be no current flowing between the leads. Placing an active element like a molecule between these leads will thus induce a transport path and, when voltage or temperature differences between the leads are imposed, thermoelectric phenomena [5]. The coupling of the molecule and the leads will be of tunneling type, i.e., one can usually assume that this coupling is rather weak.

In the present paper, we develop a simple nonequilibrium model to descibe the stationary thermotransport through such a nanostructure, using the idea of resonant tunneling. Guided by the experimental findings, we argue that one can actually restrict the theory to lowest order in the tunneling. The resulting model is rather simple, but can be solved analytically, and the theoretical results can be directly compared with experimental data. We find a rather good agreement with experiment and can in addition provide a more accurate description and interpretation in one case.

2 RESONANT TUNNELING WITH APPLIED TEMPERATURE GRADIENT

Resonant electron tunneling through a quantum system consisting of double potential barriers is very sensitive to the position of the electronic states in the constricted quantum structure [6]. This circumstance can be used for an effective control over the tunneling process. While it is usually challenging to contact molecules via standard leads, using an STM tip to create break junctions with molecules emersed on a metal surface leads to a controlled way to generate reliable contacts. This has been used recently for benzenedithiol (BDT), dibenzenedithiol (DBDT) and tribenzenedithiol (TBDT) to study thermolectric effects in the transport through such molecules [2].

Based on the setup of the experiment in Ref. [2], Fig 1A, we use as model a double-barrier tunneling system with an energy profile shown schematically in Fig. 1 [7–11]. In the following, we identify the substrate with the label "L" and the tip with "R". The Hamiltonian describing the tunneling of electrons through such a structure can be chosen in the form

$$H = H_0 + H_W + H_T. \tag{1}$$

The first term of this Hamiltonian

$$H_0 = \sum_{k\sigma} \varepsilon_L(k) a^\dagger_{k,L,\sigma} a_{k,L,\sigma} + \sum_{k\sigma} \varepsilon_R(k) a^\dagger_{k,R,\sigma} a_{k,R,\sigma}. \tag{2}$$

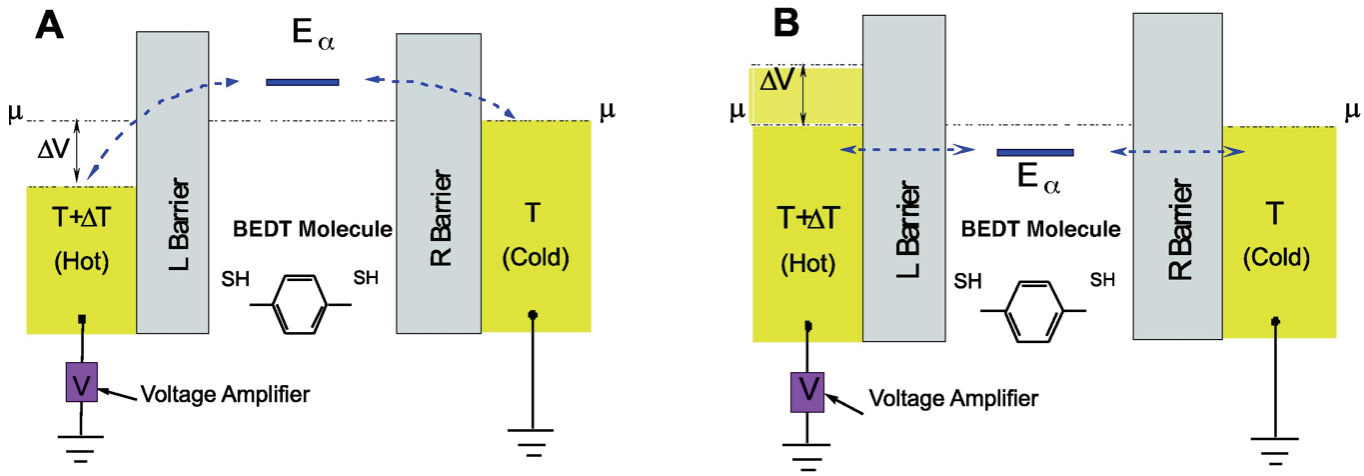

Figure 1: Schematic model to study thermoelectric phenomena for a BDT molecule attached to leads. **A** shows the case where the LUMO provides the resonant level, and **B** corresponds to a HOMO as resonant level. The energies of the orbitals, the bias ΔV and the temperature difference ΔT are chosen to provide a setup for the thermopower measurement, i.e., no electrical current is flowing

describes electrons in the left lead (metal surface) and in the right one (STM tip). Because we are not interested in the detailed properties of the leads, we assume that these charge carriers can be taken to be quasi-particles, and $a^\dagger_{k,L,\sigma}(a_{k,L,\sigma})$ and $a^\dagger_{k,R,\sigma}(a_{k,R,\sigma})$ are the creation (annihilation) operators for these quasi-particle in the surface and, respectively, tip. The dispersions are, in the same spirit, given by $\varepsilon_{L/R}(k) = \hbar^2 k^2/2m_{L/R}$, where $m_{L/R}$ denote the effective masses for the left and right leads. We will assume $m_L = m_R = m$ in the following for simplicity.

The Hamiltonian H_W describes the electronic states on the molecule. It can be written in the form

$$H_W = \sum_\alpha E_\alpha\, a^\dagger_\alpha a_\alpha + H_{\rm I}, \tag{3}$$

where α labels the single-particle levels of the molecule, and $H_{\rm I}$ denotes possible interactions. The single-particle energies in the well depend on the applied bias ΔV across the molecule and can be written as $E_\alpha = \epsilon_\alpha - e_0\,\beta\,\Delta V$, where ϵ_α is the bare energy of the resonant state in the quantum well, ΔV the potential drop across the molecule, $e_0 > 0$ the elementary charge, and β a factor depending on the profile of the potential barriers (for identical barriers, $\beta = 0.5$). Finally, the Hamiltonian H_T describing the tunneling of electrons through the barriers has the conventional form

$$H_T = \sum_{k\alpha,\delta=L,R} \left(T_{\alpha\sigma\delta}(k)\, a^\dagger_{k,\delta,\sigma} a_\alpha + \text{H.c.} \right). \tag{4}$$

Here, $T_{\alpha\sigma\delta}(k)$ is the matrix element of tunneling from the surface (respectively, the tip) to and from the molecule.

When we apply a constant external bias across the system, a nonequilibrium steady-state electron distribution will result. We assume that the electron distribution functions in the electrodes (source, drain) are equilibrium ones, i.e., Fermi functions, due to the large volumes of these reservoirs, but their chemical potentials and temperatures can be different. The chemical potentials usually encode a voltage drop across the nanoregion. Hence, in our model, $\mu_L = \mu + \Delta\mu$, $\mu_R = \mu$, and $\Delta\mu = -e_0 \Delta V$.

The simple setup of the system in Fig. 1 makes the evaluation of nonequilibrium properties comparatively simple. The important quantity entering all formula is the density of states (DOS) $\rho_\alpha(E)$ for the local level in the presence of the leads [12]. To calculate it, we need the retarded Green's function $G_{\alpha,\alpha}(E)$ [13], from which we can obtain the DOS as

$$\rho_\alpha(E) = -\frac{1}{\pi} \sum_\alpha \operatorname{Im} G_{\alpha,\alpha}(E + \imath\eta).$$

The electron distribution function $f^\alpha_W(E)$ in the quantum well is essentially nonequilibrium. It can be determined from the condition of equality of the tunneling currents through the source and the drain. The resulting distribution function has the form [12]

$$f^\alpha_W(E) = \frac{1}{\Gamma_\alpha(E)} [\Gamma^\alpha_L(E) f_L(E) + \Gamma^\alpha_R(E) f_R(E)], \tag{5}$$

$$\Gamma_\alpha(E) = \Gamma^\alpha_L(E) + \Gamma^\alpha_R(E), \tag{6}$$

where $\Gamma^\alpha_L(E)$ and $\Gamma^\alpha_R(E)$ are the tunneling rates for source (L) and drain (R), given by the expressions

$$\Gamma^\alpha_L(E) = \sum_{k\sigma} |T_{\alpha\sigma L}(k)|^2 \delta(E - \varepsilon_L(k)), \tag{7}$$

$$\Gamma^\alpha_R(E) = \sum_{k\sigma} |T_{\alpha\sigma R}(k)|^2 \delta(E - \varepsilon_R(k)), \tag{8}$$

and $f_L(E)$ and $f_R(E)$ are the quasi-particle distribution functions in the source and the drain, respectively. They have the Fermi–Dirac form, and their temperature dependences read

$$f_{L/R}(E) = \left\{1 + \exp\left[\frac{E - \mu_{L/R}}{k_{\mathrm{B}} T_{L/R}}\right]\right\}^{-1}, \tag{9}$$

where k_B is the Boltzmann constant, and $T_{L/R}$ are temperatures in the source and the drain, respectively.

3 DOUBLE BARRIERS THERMOSTRUCTURES FOR RESONANT TUNNELING

With the above formula for the distribution function, one can straightforwardly evaluate physical quantitites. For example, the occupancy of the molecule can be determined with the help of expression [7]

$$n_\alpha = -\frac{1}{\pi} \int dE\, f_W^\alpha(E)\, \mathrm{Im} G_{\alpha,\alpha}(E).$$

Moreover, the net current J_{sd} between the source and the drain through the molecule is given by the equation [9, 12]

$$J_{sd} = -\frac{e_0}{\hbar} \sum_\alpha \int \Upsilon_\alpha(E)\, [f_L(E) - f_R(E)] \rho_\alpha(E)\, dE, \tag{10}$$

where $\Upsilon_\alpha(E) = \Gamma_L^\alpha(E)\Gamma_R^\alpha(E)/\Gamma_\alpha(E)$. Since we assume tunneling contacts, the transition rates Γ_R^α, Γ_L^α are exponentially dependent on the barrier widths and heights. Correlation effects between the electrons in a nano-structure encoded in H_{I} can be taken into account by means of $\rho_\alpha(E)$, too [12], and will in general dramatically modify the properties [14, 15]. Unfortunately, a complete theoretical solution of this more realistic model is at present possible in the linear response regime only (see for example Ref. [16] for an overview). In particular, treating thermoelectric effects is a particular challenge as the temperature gradient across the dot cannot be simply included into the Hamiltonian of the leads.

In the following we use the limit $\Gamma \to 0$, i.e. we approximate the local Green's function by its atomic limit[1]

$$\rho_\alpha(E) \approx C_\alpha\, \delta(E - E_\alpha), \tag{11}$$

where the weights C_α encode the effect of interactions on the molecule and we take into account only the pole with the strongest weight. In other words, we neglect the influence of the leads on the molecule's states, in particular also renormalizations due to non-equilibrium.

[1]One could in principle also use a Lorentian form with width $\propto \Gamma_\alpha(E)$ here, but would then loose the analytical solution. Furthermore, this approach would at the present level only introduce a further unknown parameter into the calculations.

Inserting the approximation (11) into the expression for the current we finally obtain the formula

$$J_{sd} = -\frac{e_0}{\hbar} \sum_\alpha C_\alpha\, \Upsilon_\alpha(E_\alpha)\, (f_L(E_\alpha) - f_R(E_\alpha)). \tag{12}$$

The distribution functions $f_{L/R}(E_\alpha)$ are exponentially dependent on the energy E_α. Thus, when $|E_\alpha - E_{\alpha'}| \gg k_{\mathrm{B}} T$, where $E_{\alpha'}$ denotes a neighboring molecular orbital, there will be one particular energy E_α for which $|E_\alpha - \mu|$ is minimal. As discussed previoulsy, we can assume a weak tunneling coupling and a reasonable strong energetic separation of the molecular orbitals, and hence the transport through all other orbitals will be exponentially suppressed compared to this orbital and can hence be neglected. Within this approximation, Eq. (12) can thus be reduced to the simple form $\Upsilon_\alpha(E_\alpha)[f_L(E_\alpha) - f_R(E_\alpha)] = 0$, respectively, for small but finite $\Gamma_{L/R}^\alpha(E)$,

$$f_L(E_\alpha) - f_R(E_\alpha) = 0. \tag{13}$$

According to our definition, E_α is the energy level of a BDT molecule which has the smallest distance to the chemical potential. This will either be the highest occupied molecular orbital (HOMO) or the lowest unoccupied molecular orbital (LUMO). That molecule level is, as noted before, shifted by the voltage ΔV as $\Delta E = E_\alpha - \epsilon_\alpha = -e_0 \beta \Delta V = \beta \Delta\mu$. For asymmetric barriers we have $\beta = a_L/(a_L + a_R)$, where a_L and a_R are the widths of the left and right barriers, respectively. With the explicit form for Fermi's function (9) the solution of Eq. (13) becomes

$$e_0 \Delta V = \frac{(\epsilon_\alpha - \mu)}{T + \beta\, \Delta T}\, \Delta T. \tag{14}$$

Equation (14) has a rather interesting implication. Assuming a positive temperature gradient, $\Delta T > 0$, the sign of the thermovoltage depends solely on the relative position of the level contributing to the resonant tunneling to the chemical potential. In the case $\epsilon_\alpha > \mu$ we would observe a positive thermovoltage, while a negative will occur for $\epsilon_\alpha < \mu$. Note that this scenario is valid only when $|\epsilon_\alpha - \mu| \ll |\epsilon_\beta - \mu|$ for all other orbitals $\beta \neq \alpha$. However, for $|E_{\mathrm{LUMO}} - \mu| \approx |E_{\mathrm{HOMO}} - \mu|$, i.e. close to a particle-hole symmetric situation, the two transmission channels would contribute with opposite sign, and we would expect thermoelectric effects to be strongly suppressed, presumably below the noise level of the experiment. However, as the experiment shows a clear signal, we infer that there is only one orbital dominating the resonant tunneling contribution to the transport. Note that this conjecture is also in agreement with the general discussion in Ref. [2] following their Eq. (4).

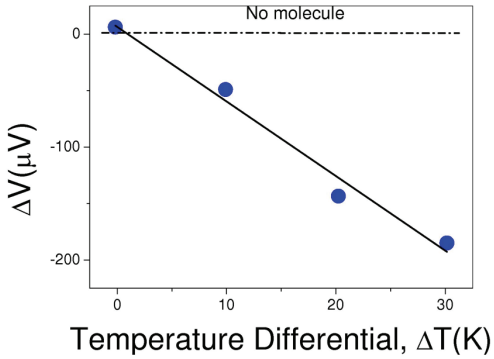

Figure 2: Comparison of experimental data (blue circles [2]) with theoretical curve (by Eq.(14)) is demonstrated

The first observation is that the experiment gives $\Delta V < 0$, i.e. according to our result we must have $\epsilon_\alpha < \mu$. Thus, the energy level ϵ_α seen in experiment is a HOMO, i.e. we have realised the condition shown in Fig. 1B. In fact, the conductivity of the tunneling structure is determined by electron holes. The detailed comparison of the thermovoltage ΔV as function of ΔT is shown in Fig. 2. Since $\Delta T \ll T \approx 300$ K, Eq. (14) can be approximated by a linear relation

$$e_0 \Delta V = (\epsilon_\alpha - \mu)\Delta T/T. \tag{15}$$

From the comparison with the experiment, we get an average value of $(\mu - \epsilon_{\rm HOMO})/e_0 T \approx 7\ \mu$V/K.

4 SUMMARY

A theoretical calculation of the transport through nano-structures makes a full quantum-mechanical description of the system mandatory. In contrast to bulk materials, one cannot even adopt some semiclassical approach based on, e.g., the Boltzmann equation here. Since one also needs to take into account the inherent non-equilibrium situation in many cases, solving this problem has become one of the most challenging tasks in modern condensed matter theory. A certain simplification arises when one can use the concept of resonant tunneling. This is usually possible in weakly contacted nano-objects like molecules, and allows one to quite accurately describe the thermoelectric phenomena in these systems.

Given the complexity and in particular non-availability of full-featured theoretical calculations off thermal equilibrium, we believe that such analytical results – even if they appear too simple or straightforward – are nevertheless very important steps to enhance our knowledge about the transport through nano-structures and can actually also serve as benchmarks to test more elaborate theoretical tools to be developed.

ACKNOWLEDGMENTS

We acknowledge financial support by the Deutsche Forschungsgemeinschaft through project PR 298/12 (T.P., S.K., and V.K.). S.K. is grateful also to the Institute for Theoretical Physics of the University of Göttingen and T.P. thanks the Bogolyubov Institute for Theoretical Physics of the NASU in Kiev for their support and hospitality during the respective visits. S.K. is also grateful for a financial support to the SASIIU of the project Ukraine – Republic of Korea.

REFERENCES

[1] M. Paulsson et al., Phys. Rev. B 67, 24103(R), 2003.
[2] P. Reddy et al., Science 315, 1568, 2007.
[3] J.R. Prance et al., Phys. Rev. Lett. 102, 146602, 2009.
[4] V. Ermakov, S. Kruchinin, and A. Fujiwara, Proceedings NATO ARW "Electron transport in nanosystems", edited by J. Bonca and S. Kruchinin, Springer, Berlin, 341-349, 2008.
[5] L.P. Kouwenhoven et al., in "Mesoscopic Electron Transport (Proceedings of the NATO Advanced Study Institute)", L. Sohn, L.P. Kouwenhoven, and G. Schön, eds., Kluwer, Dordrecht, 1997.
[6] H. Grabert, M.H. Dovoret, "Single Charge Tunneling", Plenum, New York, 1992.
[7] V.N. Ermakov, Physica E 8, 99, 2000.
[8] A.S. Alexandrov and A.M. Bratkovsky, Phys. Rev. B 67, 235312, 2003.
[9] V.N. Ermakov and E.A. Ponezha, J. Phys. Condens. Mater 10, 2993, 1998.
[10] A.S. Alexandrov, A.M. Bratkovsky, and P.E. Kornilovitch, Phys. Rev. B 65, 155209, 2002.
[11] V. Ermakov, S. Kruchinin, H. Hori, and A. Fujiwara, Int. J. Mod. Phys. 21, 18279, 2007.
[12] Y. Meir and N.S. Wingreen, Phys. Rev. Lett. 68, 2512, 1992.
[13] G.D. Mahan, "Many-Particle Physics", Kluwer, Dordrecht, 2000.
[14] D. Goldhaber-Gordon et al., Nature 391, 156, 1998.
[15] S. Cronenwett, T. Oosterkamp, and L.P. Kouwenhoven, Science 281, 540, 1998.
[16] J. Mravlje and A. Ramšak, in "Proceedings of the NATO Advanced Research Workshop on Physical properties of nanosystems", J. Bonca and S. Kruchinin, eds., Springer, p. 45, 2010.
[17] M. Paulsson, and S. Datta, Phys. Rev. B 67, 241403, 2003.
[18] O. Entin-Wohlman, Y. Imry, and A. Aharony, Phys. Rev. B 82, 115314, 2010.
[19] S. Kruchinin and T. Pruschke, arXiv:1108.4526, 2011.