Reliability Prediction of Single-Crystal Silicon MEMS using Dynamic Raman Spectroscopy

R.S. Dewanto, Z.X. Hu, B.J. Gallacher and J. Hedley

School of Mechanical and Systems Engineering, Newcastle University,
Newcastle upon Tyne, NE1 7RU, UK, r.s.dewanto@ncl.ac.uk

Abstract

This paper proposes an extension and improvement to reliability predictions in single-crystal silicon MEMS by utilizing dynamic Raman spectroscopy to allow the gathering process of Weibull fracture test data to be done directly on devices thereby taking account of actual geometrical tolerances, dynamic load conditions and effects from the microfabrication process. A theoretical model is derived to calculate the probability of fracture of device during resonance and Raman spectroscopy is used to measure dynamically induced strains on micro-cantilever test structures. Acquiring this fracture data on devices will improve reliability prediction accuracy.

Keywords: MEMS, reliability, Weibull, dynamic Raman

1 INTRODUCTION

During MEMS device development, an analytical model can be used to give an estimation of stress/strain distribution of a structure having a simple basic geometry whilst finite element modelling better accounts for either complex geometries or fabrication tolerances. However the FE model can be problematic if inaccurate geometry input is given. The uneven distribution of stress is one of the key factors leading to structure failure in MEMS. As many types of MEMS devices are operated in dynamic loading conditions, it is important to characterize their in operation properties to predict their failure, this in turn will improve their reliability. An overview of statistical analysis and prediction of fracture of micro components is given by Härtelt [1].

Improvement to the work on reliability prediction of single-crystal silicon MEMS reported by Fitzgerald et al. [2] is implemented here by combining it with our previous works in dynamic Raman MEMS characterization [3] to monitor the device during vibration. Specifically, the dynamic Raman characterization we use in this work is continuous beam Raman spectroscopy that measures the maximum strain of the structure by taking account of Raman profile broadening during structural vibrations. The method has a resolution of 30 μstrain. The main differences of our method compared to the work of Fitzgerald are that our method is employed in a dynamic system rather than static and the Weibull parameters being used for the reliability prediction are taken in micron-sized specimens rather than in the macro scale. The Weibull parameters and reference area A_0 are taken during dynamic loading of the test structure as the pattern of stress distributions changes due to the mode of the vibration. Additional compensation factors due to penetration depth through the silicon surface and spot diameter of laser beam are also made to allow for utilization of volumetric μstrain data obtained from the Raman measurements. The key advantage of using continuous beam Raman spectroscopy is that a standard Raman system without any modification may be used and allows for simple sample preparation to maintain the simplicity of the method. A schematic of the setup is shown in figure 1 and uses a FHR1000 Horiba Jobin Yvon Raman system. This methodology is readily implementable by industry.

2 THE RELIABILITY PREDICTION METHOD

The method being used in this work is an extension of the Weibull weakest link theory [4] which assumes that the weakest link in a structure governs the rupture of the entire structure. The theory also implies that the probability of rupture will increase for a larger size of entity. Under static loading with homogenous stress distribution, this implication can be considered as the size of surface area or volume of the structure over which the critical flaws are distributed. However in this work, which is implemented in dynamic load conditions, the area of the structure is affected by a range of stress values of which lead to the probability of rupture. The range of stress values considered critical is determined empirically from fracture tests. The size of the reference area A_0 that is included within this stress range is then predicted using FE analysis and experimentally confirmed using Raman mapping. From these considerations, it can be seen that the probability of failure of a dynamically operated micromechanical structure will be different for different modes of motion.

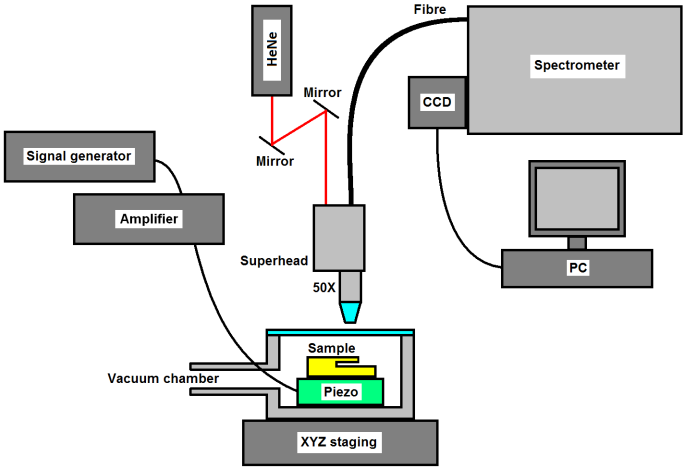

Figure 1: Schematic of the experimental setup. The test structure is mounted on a piezo disk for actuation. A signal generator and amplifier is then used to drive the sample into resonance. A FHR1000 Horiba Jobin Yvon Raman system is used to collect the Raman Data.

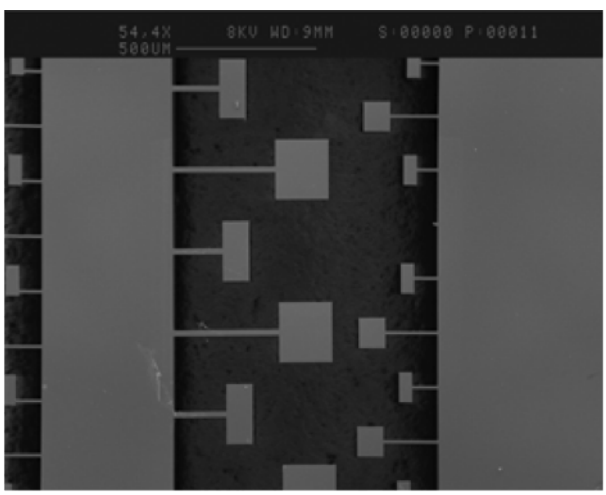

Figure 2: A SEM image highlighting the geometry of the cantilever devices used in this work. The large end mass allows for higher induced strains during resonance.

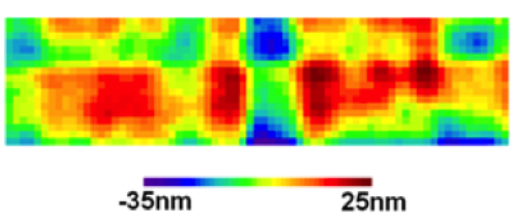

Figure 3: A surface profile measurement highlights the roughness of the DRIE etched side walls of the devices.

2.1 Rupture prediction of the device

Initially published by Weibull in 1939 [4], the probability of failure f of a structure under a particular load can be described as:

$$f = 1 - e^{-B} \tag{1}$$

where B is the risk of rupture. This is governed by the failure characteristic $\psi(\sigma)$ over the volume V of the structure and described as:

$$B = \int_V \psi(\sigma)\, dV. \tag{2}$$

For an isotropic material under uniaxial load with uniform stress distribution, the risk of rupture will only depend on the value of stress. In other words, the probability of the structure to rupture will increase proportionally with stress. However for non uniform loading conditions, for example during resonance, the risk of rupture is also a function of position, the direction and distributions of the stress and the material properties of the structure. Cassenti [5] includes these as the failure characteristic per unit element at position r within the volume of the structure, defined by $\psi_r = \psi[\sigma_{ij}(r)]$. This makes it possible to consider the non-uniform stress distribution in any direction σ_{ij} for anisotropic and inhomogenous material. This leads to the two-parameter Weibull distribution function. The failure characteristic now includes two constants, k and m, to become $\psi_r = k\{\psi[\sigma_{ij}(r)]\}^m$. By including a characteristic strength parameter of $\sigma_0(r) = k^{-1/m}$, this gives:

$$\psi_r = k\left\{\psi\left[\frac{\sigma_{ij}(r)}{\sigma_0(r)}\right]\right\}^m \tag{3}$$

where σ_0 and m are material-dependent constants whilst k can be chosen arbitrarily to represent the proportion of the unit element to the total volume considered to have sufficient levels of stress that can lead the structure to fail. Assuming single-crystal silicon as an isotropic material, the value of the characteristic strength σ_0 is constant over the entity in interest. The rupture of the structure is started from the surface, hence the volume integral of the material function needs only to be extended over the surface as shown by Weibull [4]. The failure characteristic per unit area as a function of the principal stresses S_{1r}, S_{2r}, S_{3r} of an element at position r is therefore as given in [1] by:

$$\psi_r = \frac{1}{A_0}\left[\left(\frac{S_{1r}}{\sigma_0}\right)^m + \left(\frac{S_{2r}}{\sigma_0}\right)^m + \left(\frac{S_{3r}}{\sigma_0}\right)^m\right]. \tag{4}$$

The risk of rupture B of a surface divided into R elements can therefore be written as:

$$B = \sum_{r=1}^{R} \psi_r A_r \tag{5}$$

where A_r is the associated surface area of element r.

To consider the differing surface roughnesses induced from microfabrication over the structure, we define a unique risk of rupture of B_1, B_2, B_3, ... with failure characteristic of $\psi_{r,1}$, $\psi_{r,2}$, $\psi_{r,3}$, ... respectively for every different type of surface $A_{r,1}$, $A_{r,2}$, $A_{r,3}$, ... resulting from the various microfabrication processes. We can then describe the probability of failure for a structure having T different types of surfaces as:

$$\begin{aligned} f &= 1 - e^{-\sum_{t=1}^{T} B_t} \\ &= 1 - \exp\left(-\sum_{t=1}^{T}\sum_{r=1}^{R} \psi_{r,t} A_{r,t}\right). \end{aligned} \tag{6}$$

2.2 Weibull parameters determination

The characteristic strength σ_0 determination for a particular type of surface is taken by vibrating the cantilever beam to a particular mode and recording the Raman profile broadening on the position of which the maximum strain is occurring. The position of the maximum strain can be determined by a Raman mapping measurement over the surface of interest.

For the cantilever beam used in these experiments, as shown in figure 2, it may be modeled as a cantilever with large end mass. Axial strain in the x direction of the beam due to in-plane bending is given by $\varepsilon_{xx} = y_0 K$, where K is the radius of curvature of the beam and y_0 is the distance of the point of interest to the neutral axis. For a large beam deflection, the radius of curvature is given by:

$$K = \frac{v'(x)}{\left[1 + v''(x)^2\right]^{3/2}} \tag{7}$$

where $v(x)$ is the in-plane deflection of the neutral axis. Since the cantilever is driven to vibrate in its resonance frequency, the deflection of the beam can also be described in terms of its mode shapes as $v(x) = \lambda X(x)$ where λ is the amplitude scaling factor. Using Rayleigh's method, the approximate expression for the mode shape and natural frequency is obtained as:

$$X(x) = \left(\frac{L-x}{L}\right)^3 - 3\left(\frac{L-x}{L}\right) + 2. \tag{8}$$

By measuring the deflection $v(L)$ at the free end of the cantilever and evaluating $X(L)$ the value of λ can be determined. The volumetric strain $e = {}^{\delta V}/_{V}$ may be calculated using the Poisson ratio from $e = \varepsilon_{xx} + \varepsilon_{yy} + \varepsilon_{zz}$, hence the principal stresses σ_1, σ_2, σ_3 can also be determined. The scalar quantity of equivalent stress σ_{eq} is calculated from:

$$\sigma_{eq} = \left[\frac{(\sigma_1 - \sigma_2)^2 + (\sigma_2 - \sigma_3)^2 + (\sigma_3 - \sigma_1)^2}{2}\right]. \tag{9}$$

Using this scalar equivalent strain as the characteristic strength value σ_0 then the failure characteristic per unit area ψ_r in equation (4) can be reformulated as:

$$\psi_r = \frac{1}{A_0}\left[\left(\frac{S_{1r}}{\sigma_{eq}}\right)^m + \left(\frac{S_{2r}}{\sigma_{eq}}\right)^m + \left(\frac{S_{3r}}{\sigma_{eq}}\right)^m\right]. \tag{10}$$

Statistically, the value of the characteristic strength σ_0 of a particular surface is taken from the value of equivalent stress σ_{eq} which has 63.21% possibility to fail whilst the modulus value m represents the scatter of the data. These values may be determined by fitting the experimental data to a Weibull distribution profile.

3 EXPERIMENTAL SETUP AND RESULTS

The experiments were performed on Si microcantilever beams DRIE out of single-crystal <100> SOI wafers. The crystal orientation used here means that in this work, the Raman characterization will only take account of LO phonon backscattering. The fabrication process gives two different surface characteristics to examine for the Weibull fracture parameters, these being a mechanically polished surface and the DRIE etched surfaces showing a peak to valley roughness of 60nm as shown in figure 3. A series of test structures were designed with fundamental resonant frequencies between 10 kHz to 1 MHz so that measurements of device dynamics are possible with conventional optical metrology techniques [6]. The in-plane and out-of-plane vibration modes, actuated through a piezo mounting, are used to characterize the two different surfaces of the cantilever beams. The fracture data spectra were taken by increasing the supply voltage to the piezo actuator thereby driving the device towards failure.

Determination of the induced strain in the devices is obtained by a measure of the broadening of the Raman peak during vibration. Firstly, a Raman spectrum is obtained on the device without actuation and a Voigt profile is fitted to determine static peak width, this being not only a function of silicon crystallinity but also instrumental width of the Raman system. The device is then actuated and a fitting routine used to measure the resulting broadening. Two of these Raman spectra are shown in figure 4. A plot of broadening against actuation voltage, as shown in figure 5, indicates how the technique may be used to directly measure strain in the structure. Extrapolation of the best fit line may then be used to indicate the expected failure point of the device. It should be noted that the actual measured broadening value at failure is a function of the Raman probe beam focus and mode shape under investigation.

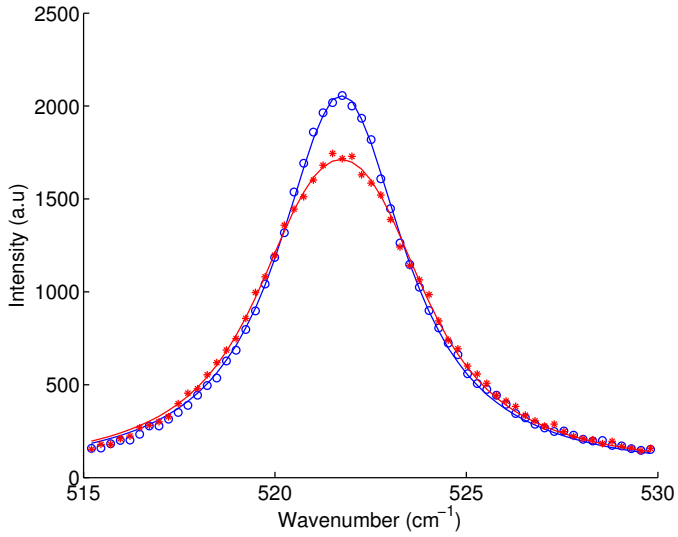

Figure 4: As the device vibrate, broadening of the Raman peak is observed. Blue circles indicate off-resonance measurements, red stars is data taken during vibration.

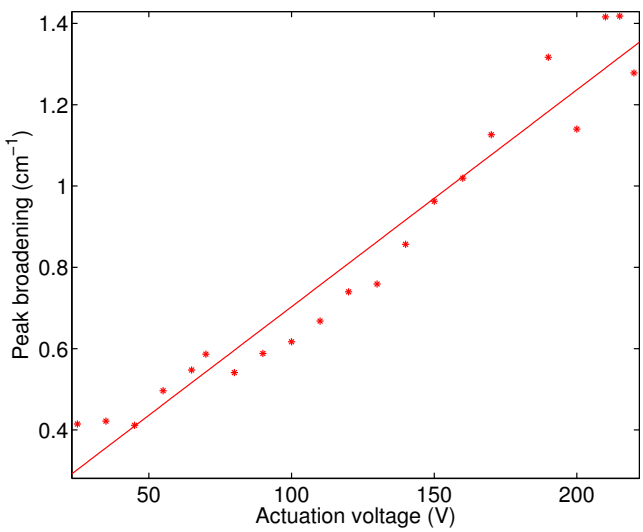

Figure 5: Measurement of Raman peak broadening, best fit line of linear region indicated with device failure imminent.

4 CONCLUSION

This work has extended the work of Weibull to show rupture prediction may be calculated in dynamically operated MEMS devices. Silicon microcantilever test structures were fabricated and a Raman peak broadening technique used to demonstrate how strain may be directly measured in a dynamically operated device using a standard Raman system. The next stage of this work is to statistically verify the model by driving the test structures to failure under a range of their harmonic frequencies. The work acts as a first step towards an improvement in investigating reliability and predicting failure in Si MEMS.

ACKNOWLEDGEMENT

R.S.D. acknowledges the Directorate General of Higher Education, Ministry of National Education, Indonesia for the funded studentship. J.H. thanks EPSRC for the research grant EP/C015045/1 thereby enabling the Raman spectroscopy aspects of this work to be performed.

REFERENCES

[1] Härtelt, M., H. Riesch-Oppermann, and O. Kraft, Statistical analysis and predictions of fracture and fatigue of micro-components. Microsystem Technologies, 2011: p. 1-11.

[2] Fitzgerald, A.M., et al., A general methodology to predict the reliability of single-crystal silicon MEMS devices. Journal of Microelectromechanical Systems, 2009. 18(4): p. 962-970.

[3] Hu, Z.X., et al., Dynamic characterization of MEMS using Raman spectroscopy. Journal of Micromechanics and Microengineering, 2008. 18(9).

[4] Weibull, W., A statistical theory of the strength of materials. Vol. Rept. 151. 1939: Royal Swedish Academy of Engineering Sciences. 45.

[5] Cassenti, B.N., Probabilistic static failure of composite material. AIAA journal, 1984. 22(1): p. 103-110.

[6] J. Hedley et al., Design, Test, Integration, and Packaging of MEMS/MOEMS, Cannes, (2001).