NUMERICAL ANALYSIS OF AN OSCILLATING MICROMIXER

R. Khelfaoui*, B. Dennai*, B. Benyoucef**, A.Slimani* , A.Maazouzi* and A.Missoum*

* Laboratory LPDS, University of Bechar, Algeria, Tel: 0021349819204,
Fax: 0021349819204, E-mail: khelfaouidz@yahoo.fr
** University of Abu Bakr Belkaid, Tlemcen, ALGERIA

:

ABSTRACT

Micromixing is particularly interesting for many microfluidic applications. In micrometric size devices, reaching an efficient mixing is often difficult, due to laminarization of the flow. Several solutions are proposed in the literature to overcome this issue. As an example, efficient mixing may be obtained using a secondary pulsed flow to destabilize the diffusion layer between the two fluids to mix. This layer is then stretched and folded, which leads to an improved chaotic mixing [Dodge et al., 2004]. However, this technique requires a specific actuation, which makes the microsystem more complex. In this paper, we study an autopulsating micromixer based on a microfluidic oscillator, the principle of which takes advantage of the Coanda effect. Oscillations of the flow are self generated, which widely simplifies the micromixer design. Different geometries are numerically investigated both for liquid and gaseous fluids using the CFD Code. The simulated frequency of oscillations is compared with analytical predictions and experimental data obtained in a millimetric sized mixer. Mixing efficiency is quantified and discussed in function of the flow structure, both for incompressible and compressible fluids, for millimetric and micrometric sizes.

Keywords: micro fluidic, oscillator, micro mixer

1 INTRODUCTION

Within the last decade the world of the "bio" micro technology has growth up, more to many university and private groups which have been developing micro systems for biomedical and chemical applications. A whole realised tasks on macroscopic scale realised in laboratory is miniaturized to mixing. Tow types of micro mixer are used in micro fluidic, active and passive.

The characteristic size of the channels is generally about a few tens of microns. This miniaturization involves series of fundamental problems related to the fluid mechanic. Indeed, at these scales, the fluidic flows are laminar [1]. The first efforts to reduce of the waiting time are focused on the reduction of the characteristic time of molecular diffusion, which varies according to the square of the characteristic length system. Thus, the subdivision of principal channel in several sub channels of lower size, which constitute the output channel was presented by Branebjerg (1996) [2].

The mixing of two fluids can be improved when the interface between the fluids increases while being stretching and while bending, so that the diffusion between the fluids occurs of variety from a certain small distance. The same micro mixer used by Volpert M (2000) [3-4] is used to realise several effective mixing flows under various conditions. The working principle of this device consists in disturbing the flow of the two liquid jets moving along the principal channel by flow oscillations generated by three pairs of lateral canals. The device is called transverse micro mixer.

In these cases, the oscillators use special designed geometric configurations, identified by the absence of moving parts, to create an environment where self-induced, sustained oscillations will occur [6, 7, 8], they can be used as flow meters. A novel fluidic oscillator has been developed and tested by V.Tesar, make this oscillators attractive as mixer of reactants for micro reactor application [9]

There have been a lot of studies on micro mixers and passive ones, which have advantages on the simplicity of biological studies. The auto pulsed micro mixer was suggested for investigation and fabrication of micro-oscillator. In this work, from basic concept of the oscillator, we have designed a new type of passive micro mixer.

2 DESIGN AND OPERATION OF THE OSCILLATOR DESCRIPTION

Micro oscillator were obtained from wall attachment micro fluidic amplifiers using a feedback loop from the outputs to the control input, figure 1, [10]

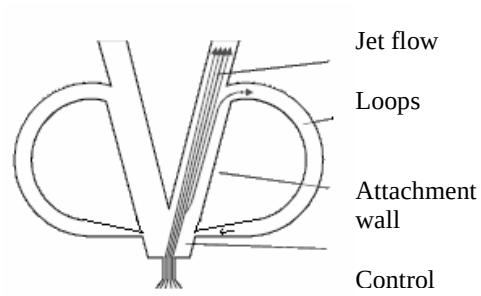

Figure 1: Description oscillator.

The principle of oscillators is based on a fluid jet, which is injected into the oscillator and bends due to small fluctuations towards one of the attachment walls. The fluid flow on the bend side of the jet, is restricted and a low-pressure regime is created, this causes the jet to be attached to the wall (Coanda effect) [7]

3 APROXIMATION OF THE OSCILATION FREQUENCY

The period of oscillations is determined by the switching time from the attachment wall to another and the transmission time through the feedback channel [7, 8], The frequency is determined by the following expression:

$$f = \frac{1}{2.(t_s + t_t)} \tag{1}$$

For liquids flow, generally the frequency of oscillation is strongly dependent on the switching time [8], it is given as in following expression:

$$f = \frac{1}{2.(t_t)} \tag{2}$$

For gases, the frequency of a bistable feedback oscillator by functions of the jet travel time, of the jet switching time, and the acoustic travel time [11]. In a rough approximation, it is given as in the following expression:

$$f = \frac{\sqrt{\gamma.r}}{2.(l_b + 2.L_o)}\sqrt{T} \tag{3}$$

T temperature K, and γ=1.4 for air, r gas constant, l_b feedback loop length, L_o outlet length. The figure 2 represents three cases of frequency.

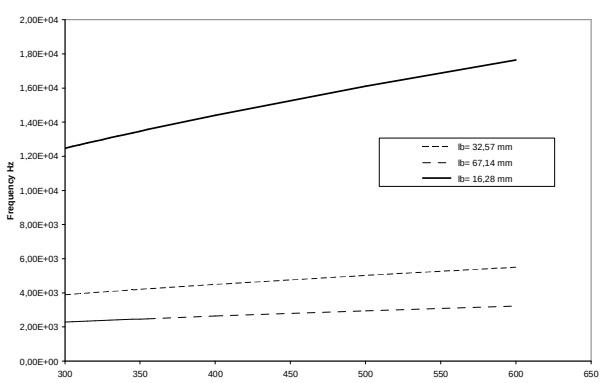

Figure 2: Frequency upon temperature.

4 NUMERICAL RESULTS

To investigate the performance of the fluidic oscillator volume finite simulations using the software CFD were carried out. With a given pressure difference between the input and the output ports, a transient calculation was performed to determine the velocity and pressure distribution in the fluidic oscillator.

Figure 3 presents the geometrical characteristics of the microfluidic oscillators defined in this work. The length of the feedback channels is 3263 µm.

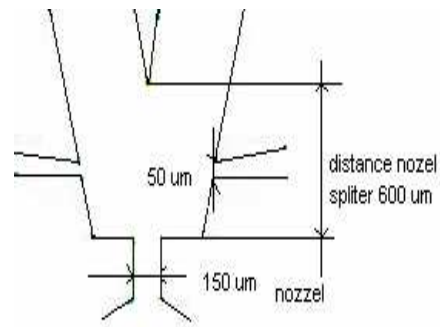

Figure 3: geometrical characteristics.

The following numerical results are obtained for air and turbulent regime of the Reynolds number at nozzle 26600, for millimetric sizes.

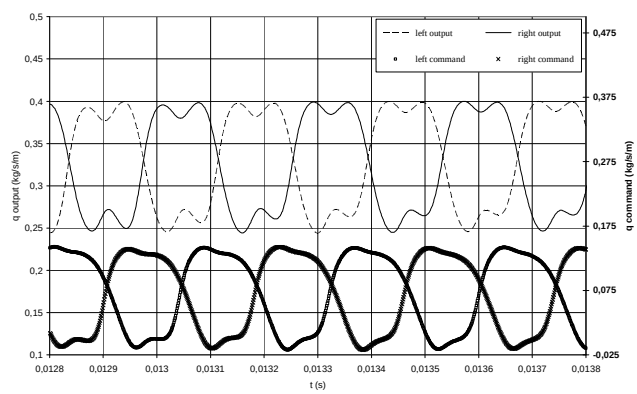

Figure 4: mass flow distribution, milimetric size.

The results of micrometric size cases are obtained for air and laminar regime of the Reynolds number at nozzle 2660.

NSTI-Nanotech 2009, www.nsti.org, ISBN 978-1-4398-1784-1 Vol. 3, 2009

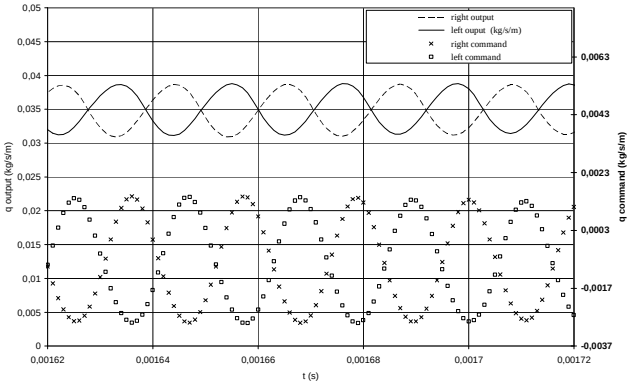

Figure 5: mass flow distribution, micrometric size.

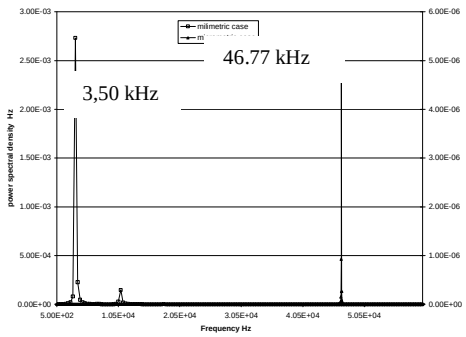

Figure 6: spectral power density of milimetric and micrometric size, and air flow.

Next results are presented for liquids flow for the Reynolds number equal to 18998 and millimetric size, and time step equal to 10^{-5} s

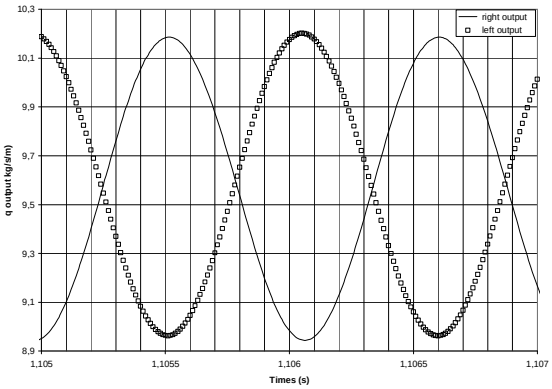

Figure.7: mass flow distribution, liquid flow

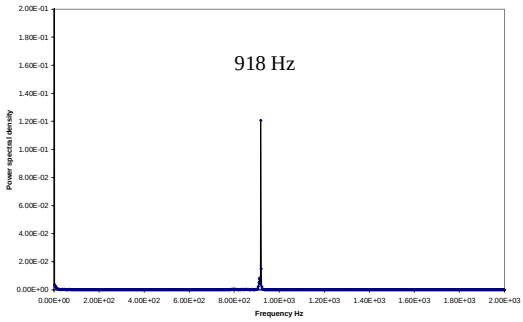

Figure 8: Spectral power density for liquid flow.

- **AIR FLOW CHARACTERISTICS**

R_e (nozzle)	Sizes	Frequency (kHz)			Δq/qmax (%)
		CFD	Eli [8]	Ge [7]	
2660	Micr	46.77	32.7	38.9	20
27006 (lam)	Mili	4.12			56
26600 (turb)	Mili	3.50	3.27	3.89	38

Table.1 Characteristics air flow.

- **LIQUID FLOW CHARACTERISTICS**

Δt (s)	Sizes	Frequency (Hz)		Δq/qmax (%)
		CFD	Eli [8]	
10^{-4}	Mili	900	899	0.04
10^{-5}	Mili	918		12
10^{-6}	Mili	924		14

Table.2 Characteristics liquid flow.

5 EXPERIMENTAL MESURES

The milimetric oscillator was investigated for supply pressures up to 2 bars. An oscillation was detected from 0.25 bars, the results of mass flow are presented on figure 9.

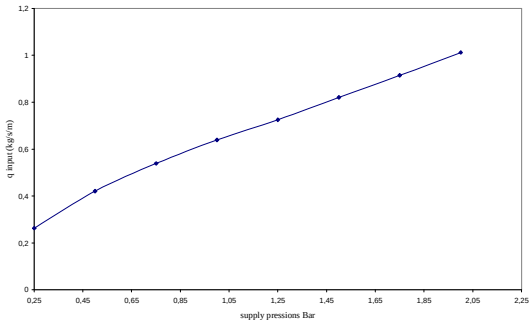

Figure 9: mass flow trough the oscillator on the supply pressure.

The experimental goal to determine the oscillation frequency of millimetric oscillator case, is that a constant pressure was applied and the output pressure signal was measured.

6 OSCILLATING MICROMIXER DESIGN

The structure of the oscillating micromixer proposed in this work consists of two connected oscillators, as shown schematically in figure 10.

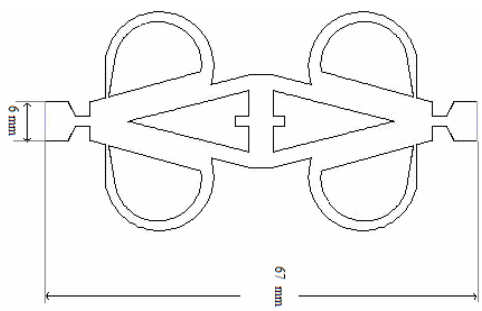

Figure 10: Oscillating micromixer design.

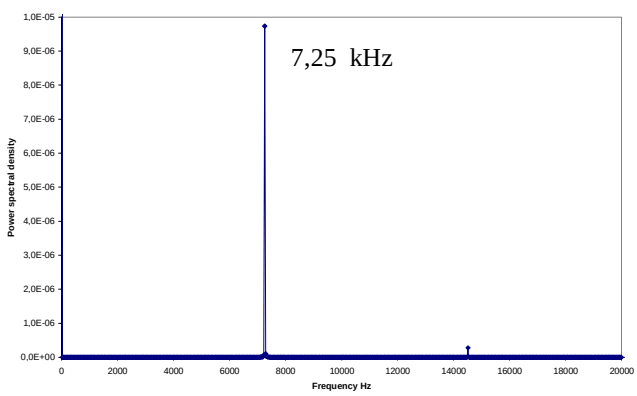

Figure.11: Spectral power density of oscillating micromixer

7 MIXTURE ESTIMATION

For two outputs oscillating mixer, the distribution of mass fraction was presented

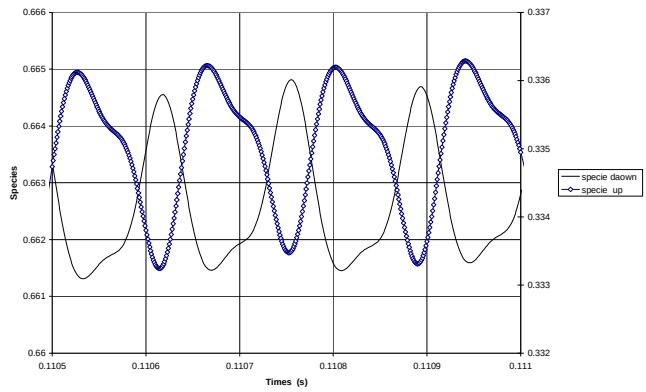

Figure 12: mass fraction distribution outlet.

CONCLUSION

The performance of oscillating micromixer with millimetric and micrometric size was simulated by using CFD Code. The first results of these numerical calculations indicate the evaluation of the fluidic oscillator oscillating frequency; the second one consists of oscillating micromixer frequency and mass fraction with millimetric size. The experimental investigation reports the oscillation was detected from 0.25 bars. In perspective we propose to undertake an experimental study to estimate a masse fraction mixture.

REFERENCES

[1] P. Tabeling, Introduction à la micro fluidique, collection Echelles, Belin, 2003.

[2] Volker Hessel, Holger Löwe, Friedhelm Schönfeld "Micromixer-a review on passive and active mixing principles" Chemical Engineering Science 60 (2005) 2479-2501

[3] Gauthier, Y., La logique interne des théories physiques, Coll. "Analytiques",Bellarmin-Vrin, Montréal-Paris, 1992.

[4] Arash Dodge, Marie-Caroline Julien, Yi-Kuen Lee, X.Niu, Fridolin Okkels, Patrick Tabeling "An example of a chaotic micromixer: the cross-channel micromixer" C.R. physique 5 (2004) 557-563

[5] M. Koch, H. Witt, A. G. R. Evans and A. Brunnschweiler, "Improved characterization technique for micromixers", *J. Micromech. Microeng.*, 9, 156–158, 1999.

[6] A. Bertsch, S. Heimgartner, P. Cousseau and P. Tenaud, "Static micromixers based on large scale industrial mixer geometry", LAB on a chip, 2001, 1. 56-60

[7] U.Gebhard, H.Hein and U. Schmidt. "Numerical investigation of fluidic micro-oscillators" J.Micromech, Microeng. 6. (1996) pp 115-117.

[8] Eliphas Wagner Simôes, Rogerio Furlan, Roerto Eduardo Bruzetti Leminski,"Numerical Oscillator For gas flow control and measurement J flow measurement and instrumentation 16(2005) pp 7-12

[9] V.Tesar, J.R.Tippetts, Y.Y.Low "Oscillator mixer for

chemical microreactors" 9th international symposium on flow visualisation, 2000, 298.1-298.7
[10] K.Foster, C.A.Parker "Fluidic Components & Circuits". 1970, John Wiley & Soon Ltd, ISBN 0471267708, pp 265-273
[11] W.Gerhard "Fluidic temperature sensor investigation for high gas temperatures", 1969. AGARDograph 135