An Analytical Solution to a Double-Gate MOSFET with Doped Body

Nitesh Agarwal and Garima Bandhawakar Wakhle
Amity Institute of Science & Technology
Amity University, Uttar Pradesh
INDIA
Contact: +919911239476,e-mail:garima_bandh@rediffmail.com

ABSTRACT

This paper presents a systematic study of doping effect on symmetric double-gate (DG) MOSFETs. One-dimensional approach have been carried out to investigate the doping effect in Double Gate MOSFET.Complete theoretical analysis has been done for Gaussian doping profile using 1-D Possion's equation. A relation has been obtained for electric potential and charge density. The results show that doping reduces the threshold voltage thus the conduction takes place at lower voltage.

Keywords: DGMOSFET, Gaussian doping, SCE

1. INTRODUCTION

A CMOS scaling is approaching the limit imposed by gate oxide tunneling. The double gate MOSFET (DG-MOSFET) with undoped body has become very attractive for scaling CMOS devices down to nanometer size [1].
Due to extra gate control DG-MOSFET compared with single MOSFET, will exhibit better short-channel effect (SCE) and almost ideal sub-threshold swing (S=60 mV/decade) [2] lower output conductance for analog applications, and higher current drive per device [3].
A one-dimensional Possion's equation have been solved for an undoped double gate MOSFET [4] to derive the analytical expression for surface potential and charge density. In the present paper a 1-D approach has been carried out for a doped double gate MOSFET using Possion's equation. Electric potential and Charge density has been calculated for Gaussian doping as well.

Fig. 1 shows the schematic diagram of a symmetric double gate MOSFET. At zero gate voltage, the position of the silicon band is largely determined by the applied gate work function. For thin silicon the bands remain flat throughout the thickness of the film. Since there is no contact to silicon body, the energy levels are referenced to the electron quasi-Fermi level.

2. ANALYTICAL APPROACH

One dimensional Poisson's equation for the silicon region with only one mobile charge density (in this case, electron) is

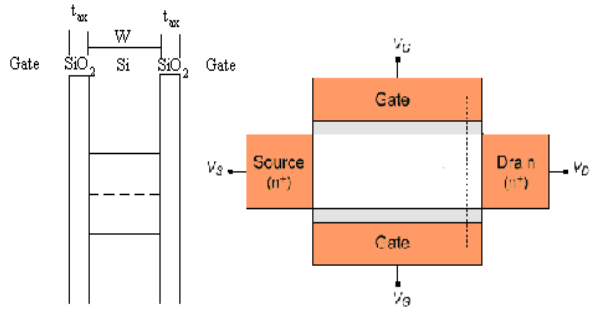

Fig.1. (a) Schematic band diagram of a symmetric double-gate n-MOSFET at zero gate voltage. . (b) Diagram for a (DG) nMOSFET.

$$\frac{d^2\psi(x)}{dx^2} = \frac{q}{\varepsilon_{si}} n_i e^{q\psi/kT} \qquad (1)$$

Where, q is the electronic charge, ε_{si} is the permittivity of silicon, n_i is the intrinsic carrier density.

Here we consider an nMOSFET with $q\psi/kT >> 1$ so that the hole density is negligible.
Integrating (1) with the symmetry boundary condition $d\psi/dx \mid_{x=0} = 0$, we obtain

$$\frac{d\psi}{dx} = \sqrt{\frac{2kTn_i}{\varepsilon_{si}}\left(e^{q\psi/kT} - e^{q\psi_0/kT}\right)} \qquad (2)$$

for $0 \le x \le W/2$ Here $\psi_o = \psi$ (at x=0) is the potential at the center of the silicon film. Substituting (2) in (1) and integrating with the symmetry boundary condition $d\psi/dx \mid_{x=0} = 0$ and $\psi_s \equiv \psi(x = W/2)$, we obtained equation (3) as

$$\frac{q(\psi_s - \psi_0)}{2kT} = -\ln\left[\cos\left(\sqrt{\frac{q^2 n_i}{2\varepsilon_{si}kT}} e^{q\psi_0/2kT} \frac{W}{2}\right)\right] \qquad (3)$$

In this equation $\psi_o = 0$, as the potential where ψ_o is the potential at the center of the silicon film, ψ_s is the surface potential, x is a variable depicting the position in silicon body.

We are discussing a doped model with uniform doping concentration $N(x)$ [5].1-D Poisson's equation is used to carry out the calculations

$$\frac{d^2\psi(x)}{dx^2} = \frac{q}{\varepsilon_{si}} N(x) \tag{4}$$

$$N(x) = \frac{Q}{\sigma\sqrt{2\pi}} \exp\left[-\left(\frac{x-R_P}{\sigma\sqrt{2}}\right)^2\right] \tag{5}$$

where, q is the electronic charge, ε_{si} is the permittivity of silicon, Q is implement dose per unit area, R_P is the projected range parameter and σ is straggle parameter.

Using (4) and (5) and integrating with the symmetry boundary condition $d\psi/dx \mid_{x=0} = 0$, we obtained equation given below, where ψ_o is zero at x=0

$$\psi(x) = -\frac{qQ}{2\varepsilon}\left[\begin{array}{l} -R_P erf\left(\frac{x-R_P}{\sigma\sqrt{2}}\right) + x.erf\left(\frac{x-R_P}{\sigma\sqrt{2}}\right) + \\ \frac{e^{-\left(\frac{x-R_P}{\sigma\sqrt{2}}\right)^2}}{\sqrt{\pi}}\sigma\sqrt{2} - x.erf\left(\frac{R_P}{\sigma\sqrt{2}}\right) \end{array}\right] \tag{6}$$

For $-W/2 \le x \le W/2$ and $\psi(0) = 0$, equation (6) becomes

$$\psi_s - \psi_0 = -\frac{qQ}{2\varepsilon}\left[\begin{array}{l} -R_P erf\left(\frac{\frac{W}{2}-R_P}{\sigma\sqrt{2}}\right) + \frac{W}{2} erf\left(\frac{\frac{W}{2}-R_P}{\sigma\sqrt{2}}\right) \\ + \frac{e^{-\left(\frac{\frac{W}{2}-R_P}{\sigma\sqrt{2}}\right)^2}}{\sqrt{\pi}}\sigma\sqrt{2} - \frac{W}{2} erf\left(\frac{R_P}{\sigma\sqrt{2}}\right) + R_P erf\left(\frac{-R_P}{\sigma\sqrt{2}}\right) \\ \frac{-e^{(-R_P/\sigma\sqrt{2})^2}}{\sqrt{\pi}}\sigma\sqrt{2} \end{array}\right] \tag{7}$$

Thus, net charge density for a doped DGMOSFET is

$$\psi_s = \frac{-2kT}{q}\ln\left[\cos\left(\sqrt{\frac{q^2 n_i}{2\varepsilon_{si}kT}}\frac{W}{2}\right)\right] - \frac{qQ}{2\varepsilon_{si}}\left[\begin{array}{l} -R_P erf\left(\frac{\frac{W}{2}-R_2}{\sigma\sqrt{2}}\right) + \frac{W}{2} erf\left(\frac{\frac{W}{2}-R_P}{\sigma\sqrt{2}}\right) + \frac{\sigma\sqrt{2}.e^{-\left[\left(\frac{W}{2}-R_P\right)^2\right]/(\sigma\sqrt{2})^2}}{\sqrt{\pi}} \\ + R_P erf\left(\frac{-R_2}{\sigma\sqrt{2}}\right) - \frac{\sigma\sqrt{2}.e^{-(R_P)^2/2\sigma^2}}{\sqrt{\pi}} \end{array}\right] + \frac{WQq}{4\varepsilon_{si}} erf\left(\frac{-R_P}{\sigma\sqrt{2}}\right)$$

The electron volume density of mobile charges is given as $n = N(x) + n_i \exp(q\psi/kT)$, where n_i is the

3. SIMULATION RESULTS

From the equation (3) and (7), we obtained the final equation which is the complete solution for the DGMOSFET under doped condition given above.

Fig. 2 is plotted between the electric potential and position in silicon for W=20nm, t_{ox}=2nm [4] for different values of implant dose per unit area (Q). R_P =0.018 μm is the projected range parameter and σ =0.045 μm is straggle parameter [6].

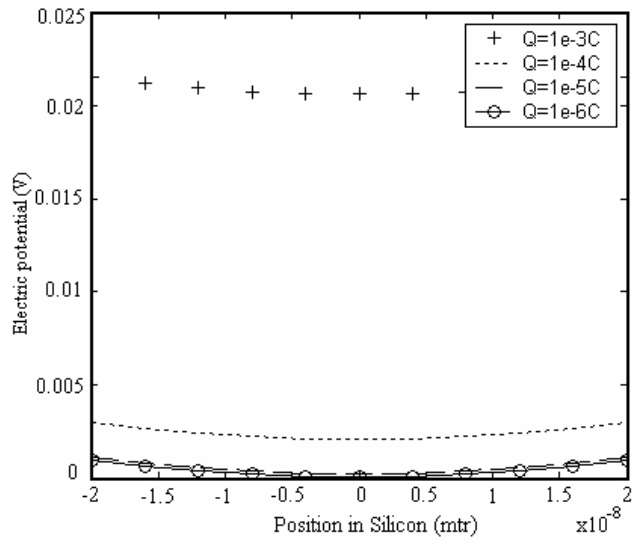

Fig. 2. Plot between potential ψ as a function of position in silicon for different values of Q

In the above graph we can see that threshold voltage reduces due to doping effect ,thus device operation can take place even at 0.02V or below.Below the threshold voltage the mobile charge density is low and $\psi_s \approx \psi_0$ .The bands move as a whole as both ψ_s and ψ_0 closely follow V_g and volume (weak) inversion takes place.

NSTI-Nanotech 2009, www.nsti.org, ISBN 978-1-4398-1782-7 Vol. 1, 2009

intrinsic charge density and *N(x)* is the dopant charge density.

We plotted a graph for different values of electron density (n) as a function of position in the silicon film for different values of ψ_0

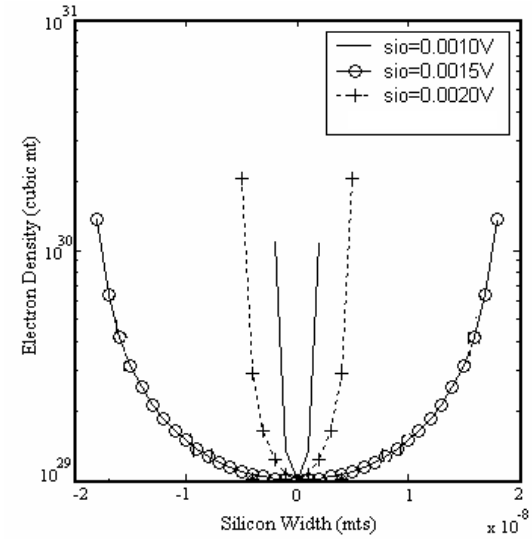

Fig. 3. The electron density of mobile charges in the body for four different values of potential (ψ_0 =si0) as a function of position.

Results are plotted in per cubic meter instead of centimeter because doping helps to work even at lower voltage. Curves are essentially flat for electron density less than $10^{20}/cm^3$.

At x=0 i.e., at the centre of the device charge density is almost negligible but near the surface of silicon film charge density increases upto $10^{24}/cm^3$.Density of charges increases near the centre of silicon film with increasing value of ψ_0 .

4. CONCLUSION

For scaled down power-supply voltage of CMOS logic circuits, present doped model is in good agreement with available results for an undoped DGMOSFET. To obtain the desired threshold voltages we can put the dopant accordingly. In the present model of a doped DGMOSFET, Vg reduces significantly for various values of ion-implant doses. Thus, the present model can be used for, low voltage, low power VLSI designing with suitable selection of two gate materials with proper work functions for the desired n and p-threshold voltages.

5. REFRENCES

[1] D.Frank,S. Laux and M. Fischetti, "Monte Carlo simulation of a 30 nm dual gate MOSFET: How far can silicon go?, " *1992 IEDM Tech. Dig.*,p553.

[2] F.Balestra and S. Cristoloveanu *et. al.*, "Double-gate silicon-on-insulator transistor with volume inversion: A new device with greatly enhanced performance,"*IEEE Electron Devices Lett.*, vol. EDL-8,p. 410 ,1987.

[3] H.Wong *et. al.*, "Design and performance considerations for Sub-0.1 µm Double-Gate SOI MOSFET,"1994 *IEDM Tech. Dig.*, pp 51-54.

[4] Y.Taur, "An analytical solution to a double gate MOSFET with undoped body," *IEEE Electron Devices Lett.*, vol. 21, no. 5, p. 245, 2000.

[5] Garima Bandhawakar and B.B.Pal, "Optically controlled E-MESFET for VLSI applications," *AMDT, SPIE Proceedings*, vol. 4600-10, pp 43-54, Nov.2001.

[6] S.M.Sze, "Modern semiconductor device physics," *A Wiely Interscience publications 1998.*