# Pressure Injection Method for Microchip Capillary Electrophoresis

A. Gaspar*, M. E. Piyasena** and F. A. Gomez***

Department of Chemistry and Biochemistry,California State University, Los Angeles, CA, USA
*gaspara@tigris.unideb.hu, **merandy9@yahoo.com,
***fgomez2@exchange.calstatela.edu

## ABSTRACT

Electrokinetic injection is commonly utilized in capillary chip electrophoresis (CE) even though mobility and matrix bias makes quantitation difficult. Hence, injection techniques that provide for both reproducible and precise injection of sample are warranted. Herein, we describe a new approach to sample introduction in poly(dimethylsiloxane) (PDMS) microfluidic devices fabricated by soft lithography technique utilizing a combination of both hydrostatic and hydrodynamic pressure instead of electrokinetic forces.

***Keywords***: microchip, sample injection, hydrostatic pressure, hydrodynamic pressure

## 1 INTRODUCTION

Electrokinetic injection is the most commonly utilized form of sample injection in microchip capillary electrophoresis (MCE) mainly due to its ease of use (no external pumps or valves are necessary to move fluid in the chip) [1, 2]. To date various types of electrokinetic injection have been developed and include different channel structures such as cross-T injection [3] and double-T injection [4], as well as different voltage-controlling methods including pinched injection [5] and gated flow injection [6]. Unfortunately, electrokinetic loading suffers from injection biases, which cause non-representative sample injections [2].

Herein, we describe a method to introduce minute volume of sample by both hydrostatic and hydrodynamic pressure in the separation channel of the chip.

## 2 EXPERIMENTAL

### 2.1 Microchip Fabrication

The PDMS chip containing the microfluidic channels was prepared by using a mold created by photolithography [7]. The PDMS chip was fabricated by cast molding of a 10:1 mixture of PDMS oligomer and cross-linking agent. Holes of 300 µm were punched through the PDMS chip for the liquid and electrode connections to the chip, and home-made reservoirs (ring of 1.5 mm ID and 6 mm height) made from PDMS were sealed onto the holes using air plasma.

### 2.2 Sample Injection

The injection procedure developed herein involves two steps. First, three ports of the chip marked buffer waste (BW), buffer reservoir (BR) and SW (sample waste) are filled up to the same height (and volume) of liquid and the sampling reservoir (SR) is filled with liquid such that the level of solution is 1-5 mm higher than the other three ports. Due to differences in the heights of the liquids sample solution flows from SR to SW (Figure 1.a).

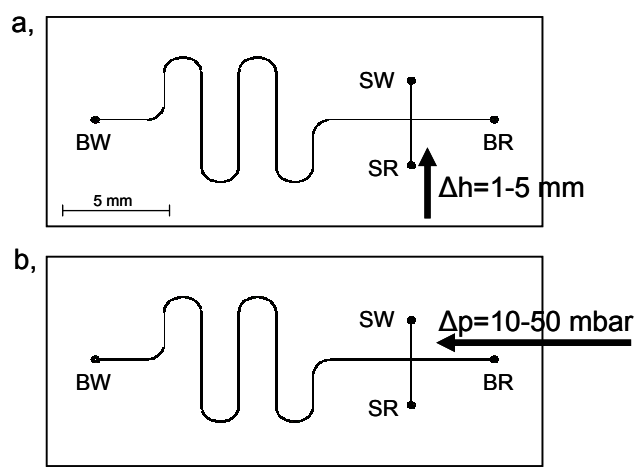


Figure 1.: Steps of the sample injection (SR: sample reservoir, SW: sample waste, BR: buffer reservoir, BW: buffer waste)

The sample flow rate can be considered constant up to 5 s duration of flow since the change in the difference of liquid heights does not exceed more than 1% during this period. During 5 s of gravity flow only 1-5 pL of sample is manipulated into the separation channel which is less than 20% of total volume injected into the sample channel (SR-SW).

After the gravity flow for a few seconds in the sampling channel, a laminar flow is generated in the separation

channel by pumping buffer from BR to BW using a syringe pump (Figure 1.b). To achieve a very low rate of laminar flow only 10-50 mbar pressure was needed, and the buffer was introduced via a fused silica capillary (50 µm ID, 40 cm long) connected to the pump. In that way the rate of laminar flow in the forepart of the microfluidic channel was only few tens of pL/s. At the cross T junction, a small portion of sample entered into the BW side of the separation channel which was pushed toward the buffer waste reservoir. The rest of the sample in the junction was purged toward the inlet (SR) and outlet (SW) of the sampling channel for 2-3 s (Figure 2).

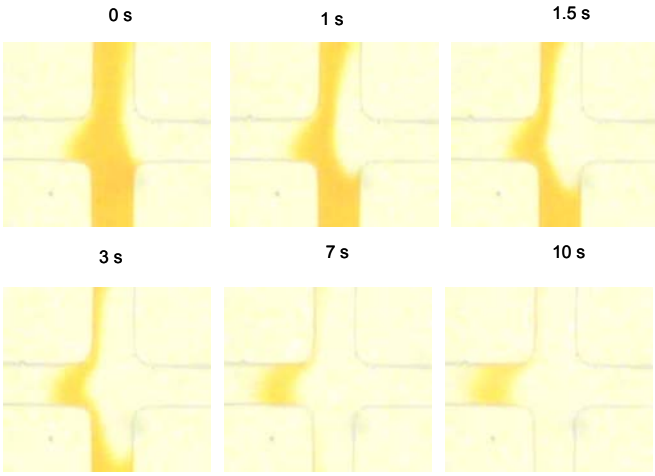


Figure 2: The snapshot of a part of the channel including the zone injected into the separation channel (BW-BR) (a,) and the diagram, in which the intensity of the RGB colors (blue, green, red) against the pixel of the snapshot were plotted (b,).

After 3 s of laminar flow (by the time the sample is purged from the junction) separation voltage is applied between BR and BW.

## 3 RESULTS AND DISCUSSION

Proper handling and controlling of the liquid level in reservoirs is critical in many type of microflidic devices. This is essential in the proposed injection process since the liquid height in the sample reservoir relative to the level in the other reservoirs effects the amount of sample injected. The volume of the sample injected into the separation channel increases linearly with the residence time of sample in the sampling channel and larger hydrostatic pressures (0.5-5 mm liquid height difference in the sample reservoir relative to the others).

With this injection procedure it is possible to inject as small as 1-5 pL of sample. However, even larger sample volumes can be injected by increasing the liquid height in the sample reservoir or the duration of the gravity flow of the sample in the sampling channel.

## 4 ACKNOWLEDGMENT

The authors gratefully acknowledge financial support for this research by grants from the National Science Foundation (CHE-0515363 and DMR-0351848), and the National Institutes of Health (1R15AI65468-01). Additional funds were supplied by the European Community for the Marie Curie Fellowship (MOIF-CT-2006-021447) of A. Gaspar at California State University, Los Angeles.

## REFERENCES

1. Roddy, E.S.; Xu, H., Ewing, A.G. Electrophoresis 2004, *25*, 229.
2. Karlinsey, J.M.; Monahan, J.; Marchiarullo, D.J.; Ferrance, J.P.; Landers, J.P. Anal. Chem. 2005, *77*, 3637.
3. Harrison, J.D.; Fluri, K.; Seiler, K.; Fan, Z.; Effenhauser, C.S.; Manz, A. Science 1993, *261*, 895.
4. Effenhauser, C.S.; Manz, A.; Widmer, H.M. Anal. Chem. 1993, *65*, 2637.
5. Jacobson, S.C.; Hergenroder, R.; Koutny, L.B.; Warmack, R.J.; Ramsey, J.M. Anal. Chem. 1994, *66*, 1107.
6. Jacobson, S.C.; Koutny, L.B.; Hergenroder, R.; Moore, A.W.Jr.; Ramsey, J.M. Anal. Chem. 1994, *66*, 3472.
7. Duffy, D. C.; McDonald, J. C.; Schueller, O. J. A.; Whitesides, G. M. Anal. Chem. 1998, *70*, 4974.