Acoustic Power Recovery System for Thermoacoustic Cooling

D.E. Schwartz, S.R. Garner, A.V. Tuganov, J.R. Johnson

PARC, a Xerox company
3333 Coyote Hill Road, Palo Alto, CA, 94304 USA, David.Schwartz@parc.com

ABSTRACT

Cooling represents a significant portion of global energy use. Conventional vapor-compression cooling uses significant quantities of refrigerant fluids with extremely high global warming potentials. Traveling-wave thermoacoustic coolers do not use refrigerants and have the potential for high efficiency. We present a thermoacoustic cooler design that utilizes acoustic power recovery to make a coefficient of performance (COP) comparable to that of conventional systems possible. The approach is validated through experiment.

Keywords: thermoacoustics, cooling, refrigeration, GWP

1 INTRODUCTION

Cooling applications represent one quarter of the electricity use in the United States, and efficiency improvements in cooling systems could lead to dramatic energy savings and greatly reduced carbon dioxide emissions. The predominant cooling technology in use today is the vapor-compression cycle, a mature technology with only marginal improvements to efficiency likely. Key refrigeration applications such as container and supermarket-display cooling suffer from low efficiencies. Moreover, the most efficient space cooling systems require large volumes of refrigerants with global warming potentials over one-thousand times that of carbon dioxide.

The thermoacoustic cooler, a type of Stirling-cycle heat pump, has the potential for high efficiency without the use of refrigerants. In this paper, we present a technique for effectively recovering acoustic power lost in other thermoacoustic systems, enabling the use of this technology for standard space cooling and refrigeration applications. Because no phase-change fluid is used, the system can be designed for a wide range of temperatures. Below, we describe the system, present simulation results indicating the potential for high efficiency, and show experimental results that demonstrate the effectiveness of the approach.

2 BACK-FACE POWER RECOVERY

Traveling-wave thermoacoustic heat pumps, in the form of pulse-tube refrigerators (PTRs), are established for cryogenic applications. At the lower temperature lifts in air conditioning and conventional refrigeration applications, however, the efficiency of such systems is limited because substantial acoustic power is dissipated in the load. To improve the performance, the load can be replaced with a power recovery system. For this purpose, direct acoustic power recovery is superior to electrical or mechanical methods, such as through linkages associated with Stirling systems, as it is simple and has no moving parts. Two techniques have been proposed for acoustic power recovery: coupling to the front or back face of the electromechanical driver [1]. Thus far, front-face, or "lumped-boost", power recovery has been preferred [2] because simple back-face recovery (equivalent to using a "double-acting driver") requires a long acoustic transmission line and transmission line losses, which increase with length, reduce the recovered power.

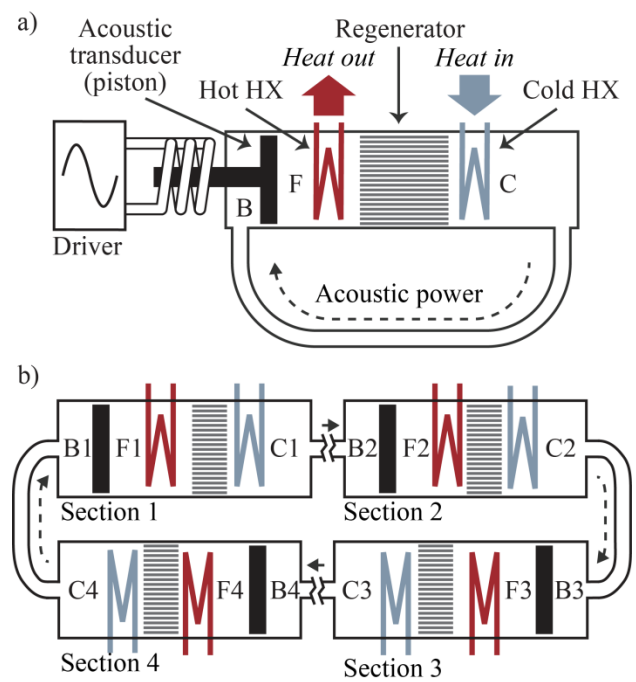

Figure 1: (a) Basic (one-section) back-face acoustic power recovery; (b) a four-section cooling system.

The key to achieving high efficiency with back-face recovery is to reduce the length of lossy transmission line. This can be accomplished by combining several thermoacoustic cooling sections in series as illustrated in Figs. 1a and 1b. Fig. 1a shows back-face power recovery with a single cooling section, consisting of an acoustic driver and a pressure vessel containing hot and cold heat exchangers, separated by a regenerative heat exchanger, or "regenerator". Acoustic power is delivered by the driver into the pressure vessel. As this power passes through the

 Cleantech 2012, www.ct-si.org, ISBN 978-1-4665-6277-6

regenerator, heat is moved from the cold to the hot heat exchanger. The acoustic power remaining at the far end of the cold heat exchanger is transferred through the transmission line to the back of the piston, where it combines with the power being delivered by the driver. The length of the transmission line is nearly an acoustic wavelength, and losses in it attenuate the acoustic power by two-thirds or more before it is recovered. Fig. 1b shows a configuration with four cooling sections in series. In this case, four separate transmission lines couple the acoustic power exiting the cold heat exchanger of each section to the back of the piston in the following section. This configuration allows the use of much shorter transmission lines, with negligible losses.

Studying the phases of the acoustic power components elucidates the mechanism by which the transmission line can be shortened in this system. The pressure at location X of a thermoacoustic system is the real part of $\boldsymbol{P_X}(t) = P_m + P_X e^{i\omega t}$ and the volume velocity (linear velocity times cross-sectional area) is the real part of $\boldsymbol{U_X}(t) = U_X e^{i\omega t}$. Here, P_m is the mean pressure, $|P_X|$ is the peak pressure deviation, $|U_X|$ is the peak volume velocity, and $\angle P_X$ and $\angle U_X$ are the phases of the pressure and volume velocity respectively. A traveling-wave system, such as the one described here, is characterized by $\angle P_X$ and $\angle U_X$ being substantially equal in the region of the regenerator.

In the cooler section in Fig. 1a, consider the locations F at the front face of the electromechanical driver, B at the back face of the driver, and C at the cold heat exchanger. The acoustic input impedance seen by the driver is $Z_{in} = (P_F - P_B)/U_F$. (Note that $U_F = U_B$, assuming the piston has a constant cross section.) The driver's mechanical output impedance ζ_{out} depends on its mechanical and electrical properties as well as the power source and the frequency of operation. Power transfer from the driver to the acoustic system is maximized when the driver output impedance matches the acoustic input impedance in the sense that $\mathrm{Re}[Z_{in}] = A_P{}^2\mathrm{Re}[\zeta_{out}]$ and $\mathrm{Im}[Z_{in}] = -AP2\mathrm{Im}[\zeta out]$, where AP is the piston cross-sectional area [3]. This determines the optimal values of A_P and $\angle Z_{in}$, the relative phase of $(P_B - P_F)$ to U_F. This phase can be adjusted by varying the geometry of the acoustic system.

In back-face recovery systems, the absolute pressure phase $\angle P_X$ evolves 360° around the loop. Fig. 2a shows the pressure phasors (the real and imaginary components of P_X) of the single-section system of Fig. 1a. There is some design flexibility as to the phase shift from P_B to P_F, which can be modified with compliant volumes on either side of the driver, subject to the constraint that the shift is less than 90° so that power is flowing into the back face and out of the front face of the driver. The volumes of the regenerator and connecting sections induce a small additional shift from P_F to P_C. Thus the phase shift from P_B to P_C is far below 360°. The remainder is provided by the looped transmission line from P_C to P_B. As phase evolution along a transmission line is proportional to its length, a long transmission line is required.

For comparison, a phasor diagram of the four-stage design of Fig. 1b is shown in Fig. 2b. In this case, assuming the four sections are identical, the four electromechanical transducers are driven with signals with 90° phase offsets, so that $\angle P_{F4} = \angle P_{F3} + 90° = \angle P_{F2} + 180° = \angle P_{F1} + 270°$. The transmission line from $C1$ to $B2$ provides a phase shift of at most $\angle P_{B2} - \angle P_{C1} = \angle P_B - \angle P_C - 270°$ allowing it to be much shorter than in the one-section case, with significantly reduced loss per cooling unit. Other numbers of sections can be used, as can unequal phase offsets and transmission line lengths.

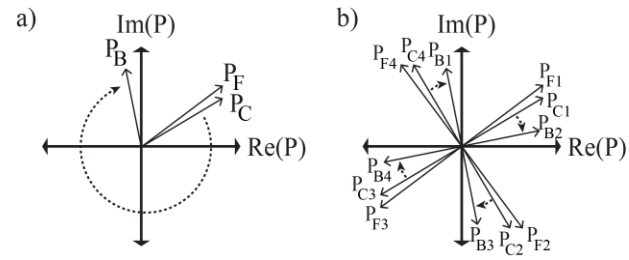

Figure 2: Pressure phasors for one-section (as in Fig. 1a) and four-section (as in Fig. 1b) coolers.

The time-averaged acoustic power at location X is given by $\dot{E}_X = \frac{1}{2}\mathrm{Re}[\mathrm{P_X}^*\mathrm{U_X}]$, where * denotes complex conjugation. In a cooling section, define $\dot{E}_H$ as the acoustic power entering the regenerator from the hot heat exchanger (at temperature T_H), $\dot{E}_C$ as the acoustic power exiting the regenerator at the cold heat exchanger (at temperature T_C), and $\dot{Q}$ as the cooling power. If the acoustic power consumed in the regenerator is $\dot{E}_R = \dot{E}_H - \dot{E}_C$, the acoustic coefficient of performance (COP) can be defined as $COP_{aco} = \dot{Q}/\dot{E}_R$, and the total COP as $COP = \dot{Q}/P = k \cdot COP_{aco}$. Here P is the electric input power and k is the efficiency of the electromechanical driver (including losses due to suboptimal coupling).

In an ideal regenerator, the amount of acoustic power consumed will be exactly what is required by the second law of thermodynamics for a given cooling capacity and temperature lift. The thermodynamically maximum performance is the Carnot COP, given by $COP_{Car} = \frac{T_C}{T_H - T_C}$. Thus, the regenerator efficiency can be defined as $\eta_{reg} = COP_{aco}/COP_{Car}$. With a regenerator that is short relative to the acoustic wavelength, the pressure is nearly constant across its length and the volume velocity ratio of the gas on the hot to cold sides equals the temperature ratio, by the ideal gas law. If we assume traveling-wave phasing in the regenerator, this is also equal to the acoustic power ratio: $\dot{E}_H/\dot{E}_C = |U_H|/|U_C| = T_H/T_C$. In this situation, $\dot{E}_C \geq \dot{Q}$, with equality in the case that $\eta_{reg} = 1$. Without traveling-wave phasing, the inequality can stand even with a perfect regenerator. In this case, the excess acoustic power in the regenerator, $\dot{E} = \dot{E}_C - \dot{Q}$, (which, disregarding losses, also circulates the system loop) is manifest as a deviation in the relative phase of pressure to velocity across the regenerator.

This phase difference means there is a standing-wave component in the regenerator and relaxes constraints on its design, admitting a larger optimal hydraulic radius.

The efficiency of the cooling core in a multiple-stage system is dependent on the driver efficiency k, the regenerator efficiency η_{reg}, the power recovery efficiency $\alpha = \dot{E}_B/\dot{E}_C$, and the circulating acoustic power as a fraction of the cooling power $\varepsilon = \dot{E}/\dot{Q}$. To first order, additional losses including those caused by pressure drops across the heat exchangers and minor and streaming losses can be folded into these parameters.

It is assumed that all cooling sections are identical and the COP of the entire system is the same as that of one section. Then, the maximum COP is given by

$$COP = \frac{\dot{Q}}{P} = k \cdot \frac{\dot{Q}}{\dot{E}_F - \dot{E}_B} = k \cdot \frac{\dot{Q}}{\dot{E}_F - \alpha \dot{E}_C} = k \cdot \frac{\dot{Q}}{\dot{E}_F - \alpha(\dot{Q} + \dot{E})} \quad (1)$$

with

$$\dot{E}_R = \dot{E}_H - \dot{E}_C = \dot{E}_F - \dot{E}_C = \left(\frac{T_H - T_C}{T_C}\dot{Q}\right) \cdot \frac{1}{\eta_{reg}} \quad (2)$$

giving

$$COP = k \cdot \frac{\dot{Q}}{\left(\frac{T_H - T_C}{T_C}\dot{Q}\right) \cdot \frac{1}{\eta_{reg}} + (1-\alpha)(\dot{Q} + \dot{E})} = \frac{kT_C}{(T_H - T_C)/\eta_{reg} + (1-\alpha)(1+\varepsilon)T_C}. \quad (3)$$

Examination of (3) reveals several features salient to design optimization. The driver efficiency k has a linear influence on the COP. Resonant electromagnetic linear actuators are commercially available with up to 85% efficiency [4]. With no power recovery ($\alpha = 0$), reducing the circulating power ratio ε directly improves the COP. However, even with an ideal driver ($k = 1$), perfect regenerator ($\eta_{reg} = 1$), and no circulating power ($\varepsilon = 0$), the maximum COP is $\frac{T_C}{T_H}$. This shows directly why pulse-tube refrigerators without power recovery have acceptable performance for cryogenic temperatures, when $\frac{T_C}{T_H - T_C} \approx \frac{T_C}{T_H}$, but cannot be successful for room-temperature cooling. As power recovery improves, the loss associated with increased circulating power decreases. In the limit of perfect power recovery ($\alpha = 1$), ε has no effect. Finally, the regenerator efficiency has a significant impact on performance, approaching a linear coefficient as $\alpha \to 1$.

3 PROJECTED SYSTEM PERFORMANCE

A model has been developed in the thermoacoustic software DeltaEC to simulate the performance of a four-stage system. The model uses 30-atm He as the working fluid and 60 Hz as the operating frequency. It has one-ton capacity and uses the mechanical and electrical parameters of a commercially available linear driver (QDrive 1S297), though the piston area is modified from what is specified as part of the optimization. To simplify the model and improve convergence, a single section is simulated with the 90° phase shift included computationally. Losses due to pumping and external heat exchangers are neglected.

Table 1 shows projected COP for several conditions based on these simulations. Performance ranges are based on temperature drops across the internal heat exchangers ranging from 1 to 3 °C. Under part-load conditions, greater than 90% of the maximum COP is maintained down to below 40% load. In the simulation results, the transmission line efficiency is 99.7%.

Significantly higher efficiency may be possible through the use of alternative working fluids. It is well known that gas mixtures such as He/Ar and He/Xe can contribute to higher performance due to a reduction in Prandtl number. A mixture of 70% He/30% Xe has been shown to improve the COP of a standing-wave cooler by 70% relative to pure He [5].

Projected Performance		
	Conditions (Th/Tc)	COP (W cooling/W electric)
Chiller	29.4 °C/6.7 °C	4.1–4.9
	IPLV	0.54–0.65 kW/ton
Refrigerator	40 °C /30 °C	1.5–1.7
	40 °C /20 °C	1.8–2.2
	40 °C /10 °C	2.2–2.5

Table 1: Performance of simulated 4-section 1-ton cooler.

4 EXPERIMENTAL RESULTS

To demonstrate the performance benefit of using multiple thermoacoustic cooling sections, we have built and tested an experimental cooler that can be configured either as a single unit with a long acoustic transmission line or as a two-section unit with a pair of shorter transmission lines.

The cooler is a stainless steel enclosure, filled with 30-atm He gas. Acoustic power is provided by a 2S102W pressure-wave generator (PWG) comprising two opposing linear alternators, purchased as a unit from QDrive and operated at 60 Hz. The acoustic power is directed through a hot heat exchanger, regenerator, and cold heat exchanger, followed by a pulse tube and ambient heat exchanger to isolate the copper transmission line from the cooling load. Each of the heat exchangers is 1 cm in length and consists of 37 3.48-cm inner-diameter copper tubes brazed between copper plates such that the gas flows through the tubes and cooling water flows in the shell. Temperatures at the hot and ambient heat exchangers are maintained near ambient with a chilled water loop. For performance measurements, the cold heat exchanger is a NiCr wire connected to a DC power source, which allows precise control of the cooling load. The regenerator is composed of 58 g of stacked 200-mesh, 0.0016-inch-wire-diameter stainless steel screen

packed to 3 cm ($r_h \approx 29$ μm). The single-unit device has an 11.6-m half-inch-diameter copper duct coupling the ambient heat exchanger to the back of the two opposing speakers of the PWG through a wye and two 38.1-cm-long quarter-inch tubes. The two-unit device is composed of two identical systems, as described, with the two units connected by 2.93-m ducts in place of the single 11.6-m duct (representing a length reduction of 75%). The two PWG's are operated at the same electric input power with voltages in antiphase. Temperatures and pressures are measured with type-K thermocouples and Endevco 8530B pressure transducers, respectively.

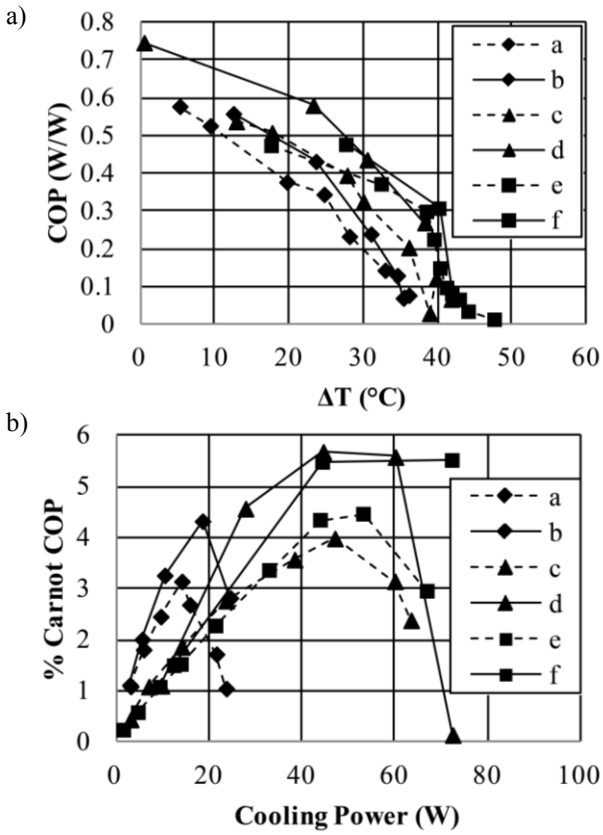

Figure 3: Performance of one- and two-section coolers: (a) COP as function of temperature lift; (b) performance under fixed input power. The data represent: (a) 1-section cooler with 44 W electric input power, (b) 2-section, 43.5 W, (c) 1-section, 104 W, (d) 2-section 100 W, (e) 1-section, 148 W, (f) 2-section, 150 W.

It should be noted that the prototype system is not designed for high performance, but as a tool to compare the one- and two-section systems, as well as to validate the models. The commercial PWG used is not optimal for a high-circulating-power design and is not coupled well to the system. Furthermore, access to the piston back-face is restricted, adding a significant loss component. Based on combined simulation and measurement, the PWG efficiency is approximately 34% in this system.

Fig. 3 shows the performance of the one- and two-section experimental prototypes for several temperature lifts and cooling powers. Using the percentage of the Carnot COP as a metric allows side-by-side comparisons of systems operated under different temperature conditions. Each speaker is operated at approximately the same electrical power, so that the two-section system uses twice the power and moves twice the heat as the one-section system. For accurate comparison, the data represent cooling and input powers for a single section. In all cases, the two-section system has higher performance with its peak performance 42% greater at ~100 W input power.

Finally, we have validated our modeling approach by creating detailed DeltaEC models of the experimental device and comparing simulated and experimental results. The DeltaEC model includes all physical sections, a detailed model of the PWG as provided by the vendor, minor losses where significant [6],[7], and heat leak as a result of Rayleigh streaming in the pulse tube [8]. Additional losses are included to compensate the poor coupling to the back of the piston. To compare the simulation with the experimental results, the temperatures and input power in the simulation are set to the experimental values. The resulting model matches the experimental results of the two-section cooler to within 15% in key parameters such as the oscilalting gas pressure at the piston and the COP.

5 CONCLUSION

Through simulation and experiment, we have shown that the use of multiple cooling sections in series can greatly improve the efficiency of back-face acoustic power recovery in thermoaoustic cooling systems. We have demonstrated a performance enhancement of 42% in going from one to two sections. An optimized four-section system using He gas is predicted to have a comparable COP to the best vapor compression systems. The performance may be further improved by the use of alternative working fluids.

REFERENCES

[1] G. Swift, D. Gardner, and S. Backhaus, J. Acoust. Soc. Am., 105(2), 711-724, 1999.

[2] W. Dai, E. Luo, Y. Zhang, and H. Ling, J. Acoust. Soc. Am. 199(5), 2686-2692, 2006.

[3] R.S. Wakeland, J. Acoust. Soc. Am., 107(2), 827-832, 2000.

[4] For example, http://www.qdrive.com.

[5] M. Tijani, J. Zeegers, and A. de Waele, J. Acoust. Soc. Am., 112(1), 134-143, 2002.

[6] G. Swift, "Thermoacoustics: A Unifying Perspective for Some Engines and Refrigerators," Acoust. Soc. Am., 2002.

[7] I.E. Idelchik and M.O. Steinberg, "Handbook of Hydraulic Resistance," Jaico, 2011.

[8] J.M. Lee, P. Kittel, K.D. Timmerhaus, and R. Radebaugh, Proc. 7th Intl. Cryocooler Conf., Santa Fe, 135-139, 1993.