Solid Oxide Fuel Cell in the hybrid system – selection of size and configuration

J. Milewski

Warsaw University of Technology, Institute of Heat Engineering
21/25 Nowowiejska Street, Warsaw 00-665, Poland, milewski@itc.pw.edu.pl

ABSTRACT

This paper sets out the results of mathematical modelling and numerical simulations of the operation of the Solid Oxide Fuel Cell Hybrid System (SOFC-HS). The governing equations of SOFC-HS modeling are given. The system evaluation from a hydrogen fuelled laboratory scale singular cell to the whole hybrid system is presented.

Keywords: fuel cell, hybrid system, mathematical model, scale-up

1 INTRODUCTION

Fuel cells generate electricity through electrochemical processes. There are many types of fuel cells, two of which – Molten Carbonate Fuel Cell (MCFC) and Solid Oxide Fuel Cell (SOFC) are high temperature fuel cells. They work at temperatures ranging from 600 to 1 000 °C [1]. The high temperature range of outlet gases allows the development of a hybrid system by opening the possibility of adding a gas turbine subsystem [2].

SOFC performance modelling is related to the multi-physic processes taking place on the fuel cell surfaces. Heat transfer together with electrochemical reactions, mass and charge transport are conducted inside the cell. The SOFC models found in the literature are based mainly on mathematical descriptions of these physical, chemical, and electrochemical properties. The SOFC models developed thus far result in good agreement with particular experimental data (for which adequate factors were obtained) and poor agreement for other than original experimental working parameters. Moreover, most of the equations used require the addition of numerous factors which are difficult or impossible to determine. There are many parameters which impact cell working conditions, e.g. electrolyte material, electrolyte thickness, cell temperature, inlet and outlet gas compositions at anode and cathode, anode and cathode porosities etc. The models developed so far are based on deep analysis of fundamental processes which occur at the fuel cell surfaces. This approach is very important for understanding the main processes of the fuel cell working principles.

ON the other hand, the fuel cell is an element of a complex system. The choice of optimum system configuration is also important. An extremely detailed model, which includes many electrochemical factors fitted to the experimental data, is of almost no use in terms of system optimization. The optimizing processes and design point selections require a different approach when size of the cell surfaces and working parameters of the cell influence other system elements. Optimization of the system often means changes of the operation conditions of the fuel cell.

2 THEORY

There are many mathematical models of the singular solid oxide fuel cell (SOFC) [3]. SOFC performance modelling is related to the multi-physic processes taking place on the fuel cell surfaces. Heat transfer together with electrochemical reactions, mass and charge transport are conducted inside the cell. The SOFC models found in the literature are based mainly on mathematical descriptions of these physical, chemical, and electrochemical properties.

The SOFC models developed thus far are mainly based on the Nernst equation, activation, ohmic, and concentration losses. Actually, this means that the specific current-voltage curve is approximated by several factors such as current limiting, exchange current and on the like. This approach results in good agreement with particular experimental data (for which adequate factors were obtained) and poor agreement for non-original experimental working parameters. Moreover, most of the equations require the addition of numerous factors (porosity, tortuosity, ionic and electronic paths, etc.) which are difficult to determine and which are often related to the microscopic properties of the cell which govern both chemical and electrochemical reaction. Very often those parameters are used as the fitting parameters without any physical background.

A new model is proposed and the governing equations of this model are presented in this paper. A detailed description of the presented model was published previously [4], only governing equations are presented in this section.

The maximum voltage of the fuel cell depends on the type of reaction occurring on the electrode surfaces. Various fuels in reaction with oxygen can give various maximum voltages. Consequently, the general form of Nernst's equation is used to estimate the voltage of SOFC:

$$E_{\max} = \frac{RT}{4F} \ln \frac{p_{O_2,cathode}}{p_{O_2,anode}} \quad (1)$$

where: T – absolute temperature; R – universal gas constant; F – Faraday's constant; $p_{O2,cathode}$ - oxygen partial pressure at cathode outlet; $p_{O2,anode}$ - oxygen partial pressure at anode outlet.

Two types of resistance are present in fuel cells: ionic resistance r_1 and electric resistance r_2. Resistance r_3 is the external load resistance of the fuel cell. The second resistance has a physical meaning both electrons passing through the electrolyte layer and fuel/air leakages. Those two phenomena have same effect on the fuel cell voltage.

An equation for the cell voltage is obtained:

$$E_{SOFC} = \frac{E_{\max} - \eta_f \cdot i_{\max} \cdot r_1}{\frac{r_1}{r_2} \cdot (1 - \eta_f) + 1} \quad (2)$$

where: $E_{\max}$ - maximum voltage; η_f - fuel utilization factor; $i_{\max}$ - maximum current density; r_1 - internal ionic area specific resistance of the cell; r_2 - internal electronic area specific resistance of the cell.

All necessary factors of the model are listed in Table 1. Those factors are needed for current density – voltage curves determination.

Factor	Value
Anode thickness, µm	**1020**
Cathode thickness, µm	**70**
Electrolyte thickness, µm	**8**
Electrodes ionic conductivity, S/cm	**2.75**
YSZ σ_0, S/cm	**390.95**
YSZ E_0, kJ/mol	**87.806**
Electrodes σ_0, S/cm	**1567.1**
Electrodes E_0, kJ/mol	**67.22**
Area Specific Electric Resistance, cm²/S	**5.50**

Table 1: Main factors used in the model of SOFC.

The value of maximum current density ($i_{\max}$) is constant in the design point calculations. In the case of design point calculations, the voltage-fuel utilization factor curve ($E = f(\eta_f)$) is the fuel cell characteristic.

The used model was compared with experimental data for hydrogen as a fuel diluted by helium and hydrogen as fuel diluted with steam for different cell architecture as well. The model validation can be found in [4].

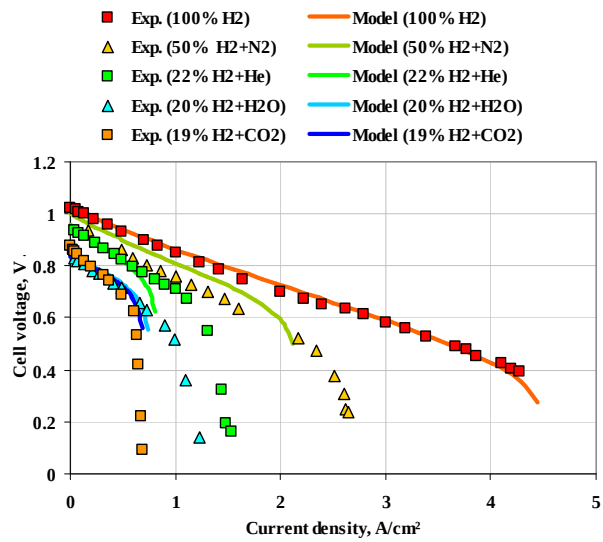

Figure 1: Experimental and simulation data at various fuel compositions for experimental data taken from [6]. Temperature 800°C, air as oxidant.

3 SOFC HYBRID SYSTEM

A zero-dimensional approach is used for the modelling of system elements. The whole hybrid system consists of an air compressor, a gas turbine, heat exchangers, and combustion chambers together with a SOFC Module (SOFC-M). The SOFC-M is supplied with pre-heated and compressed air and compressed fuel.

The excess power of the compressor turbine subsystem is converted into electricity. The HS efficiency is given by the equation:

$$\eta_{HS} = \frac{P_{SOFC} + (P_T - P_C)}{n_{fuel} \cdot LHV_{fuel}} \quad (3)$$

where: P_{SOFC} - electric power generated by SOFC Module, n_{fuel} – fuel molar flow; LHV_{fuel} - Lower Heating Value of fuel; P_T – gas turbine power, P_C – air compressor power.

A few system configurations were analyzed, starting from the SOFC only. The SOFC only represents a device which generates power by utilization of the SOFC stack, without any additional devices.

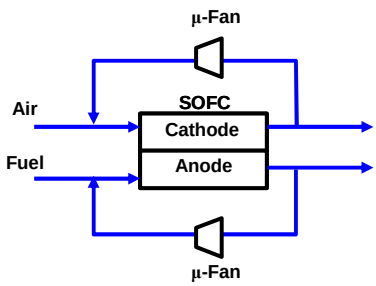

Figure 2: The configuration of the SOFC only case.

The first hybrid system analyzed (Case 1) consists of an SOFC stack fuelled by hydrogen, and a gas turbine subsystem. Both anode and cathode re-cycle streams were added.

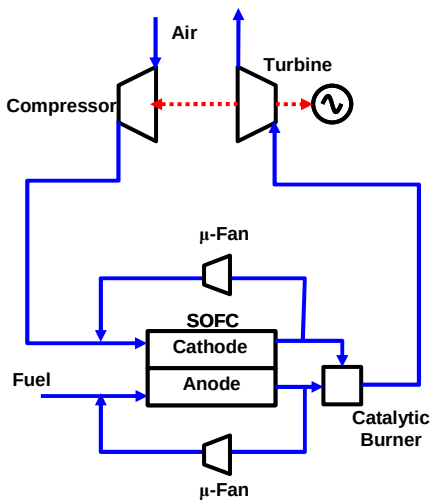

Figure 3: The system configuration of the Case 1 and 2.

The second hybrid system analyzed (Case 2) has the same configuration as Case 1 but the fuel was changed from hydrogen to methane.

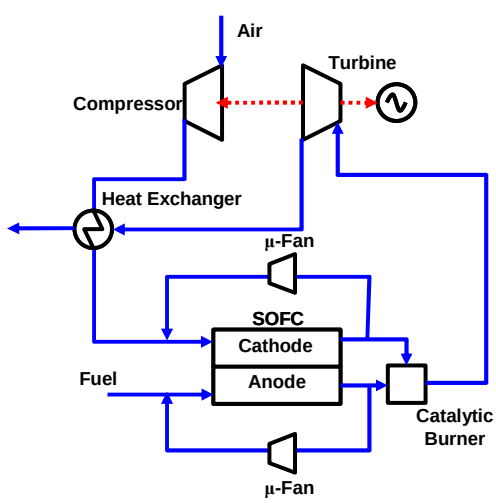

Figure 4: System configuration of Case 3.

The third hybrid system analyzed (Case 3 and Case 4) is similar to Case 2 but an additional heat exchanger was added. The heat exchanger is placed just after the air compressor and is fed by the gas turbine outlet stream.

The following parameters are optimized for the system design selection:

- gas turbine pressure ratio (1 – 30);
- SOFC anode re-cycle factor (0 – 90 %);
- SOFC cathode re-cycle factor (0 – 90 %);
- SOFC fuel utilization factor (0 – 90 %);
- heat exchanger effectiveness (0 – 90 %);
- maximum current density (2.7 – 10 A/cm²).

There were two constraints of the optimizing procedures: Turbine Inlet Temperature (below 1100°C) and steam to carbon ratio at anode inlet (above 1.4). The cell temperature was kept at a constant level (800°C) in each analyzed case.

The s/c ratio specifies the molar flow of steam in relation to the sum of carbon monoxide and methane molar flows:

$$s/c = \frac{n_{H_2O}}{n_{CH_4} + n_{CO}} \tag{4}$$

where: n_{CH4} – methane molar flow; n_{H2O} – water molar flow; n_{CO} – carbon oxide molar flow.

The s/c ratio is a very important parameter and the value of it should be controlled to avoid carbon deposition. Carbon deposition is a harmful process that causes very rapid degradation of fuel cells and the reformer.

Fuel cell size is a crucial issue in light of the cost and operation of the hybrid system. Similar fuel and oxidant flow can be delivered to the various fuel cell areas, resulting in higher or lower current densities. On the other hand, the same fuel utilization factor can be realized by various cell areas as well. Usually, the current density of the fuel cell is assumed at a constant level, which results in a fixed ratio between the fuel delivered and the cell area.

The heat exchanger's effectiveness defines the amount of heat transferred from a hot medium to a cold one. Effectiveness is defined by the following relationship:

$$\eta_{HX} = \frac{T_{hot,in} - T_{hot,out}}{T_{hot,in} - T_{cold,in}} \tag{5}$$

4 RESULTS

Assuming the SOFC stack only fuelled by hydrogen, fuel efficiency obtained is low and equals 37%. Constructing the

hybrid system by adding an air Compressor and a gas turbine, the efficiency can be increased to 66%.

Parameter	Case				
	SOFC	1	2	3	4
Fuel	H_2	H_2	CH_4	CH_4	CH_4
Efficiency, %	37	57	63	66	68
Anode re-cycle, %	90	90	90	85	90
Cathode re-cycle, %	70	40	43	43	42
TIT, °C	-	1100	1100	1100	1025
Pressure ratio	-	13	19	8.2	9.6
Fuel utilization factor, %	26	21	27	26	34
Steam-to-Carbon ratio	-	-	4.1	2.5	5.0
Fuel Cell Area, cm²	2.9	680	610	463	780
System Power, W	2.5	800	780	660	670
Heat Exchanger Effectiveness, %	-	-	-	90	62
GT power/total power, %	-	31	23	33	22
i_{max}, A/cm²	5.4	5.4	5.4	5.4	2.77

Table 2: Results of the optimizing procedures of the SOFC-HS.

Evolution of system performance from singular laboratory cell to hybrid system is shown. Both the fuel and the system configuration were changed. Hydrogen fuelled in a laboratory scale cell can achieve efficiency of 37%. The addition of a gas turbine subsystem (Case 1) can raise the efficiency to 57%. By changing the fuel from hydrogen to methane efficiency is increased to 63% (Case 2) due to reforming reactions which convert thermal energy to the chemical energy of fuel. Addition of the heat exchanger gives increased efficiency, rising to 66% (Case 3). The presented model contains the factor i_{max}, which introduces a correlation between the cell voltage, cell area and quantity of delivered fuel. This means, that a larger fuel cell will generate relatively higher voltages, simultaneously with lower current densities. Then the fuel cell size can be the object of an optimizing procedure. For the selection of cell size the value of i_{max} is optimized in Case 4 where an additional 2% efficiency is achievable. The 2% increase is obtained through almost doubling the size of the fuel cell. Both systems generate the same power.

5 CONCLUSIONS

The mathematical model of SOFC based on a combination of electrical laws, gas flow relationships, solid material properties, and electrochemistry correlations is presented. The presented model is very stable and can be used for both simulations and optimization procedures. During those procedures in all cases physical results will be generated (e.g. cell voltage is always lower than 1.2V and so on). The model is characterized by as a low number of required factors as possible. Separation between the “design-point” and “off-design operation” modes is made. Comparison with experimental data is shown and commented.

The SOFC Hybrid System model has been created by utilization the the model. The system configurations as well as fuel cell size have been optimized to achieve the highest possible efficiency. The optimum system configuration and cell size have been found.

Obtained results show that adequate selection of the size, design and working parameters of the SOFC is crucial when seeking to obtain a highly efficient hybrid system. Additionally, both a gas turbine and an air compressor should be designed for operation with SOFC.

6 ACKNOWLEDGMENTS

This scientific work was financially supported in the period of 2009 ÷ 2010 as a research project.

7 REFERENCES

[1] N. Q. Minh, “Solid oxide fuel cell technology-features and applications”, Solid State Ionics, 174, 271-277, 2004.

[2] J.Milewski, A. Miller, “Thermodynamic of SOFC Hybrid System - Optimization and Parameters Selection”, World Hydrogen Technology Convention Singapore. 2005

[3] S. Kakaç, A. Pramuanjaroenkij, X.Y. Zhou, “A review of numerical modeling of solid oxide fuel cells”, International Journal of Hydrogen Energy, 32, 761-786, 2007.

[4] J. Milewski, "Mathematical model of SOFC for complex fuel compositions", ASME Paper ICEPAG2010-3422, 2010.

[5] Hyprotech Corporation, HYSYS.Plant 2.1 user guide

[6] Y. Jiang, A.V. Virkar, “Fuel Composition and Dilutent Effect on Gas Transport and Performance of Anode Supported SOFCs”, Journal of the Electrochemistry Society, 150, 2003.