Diamond-Hardfaced TiC/Ti Composite for Submersible Pump Bearings in Geothermal Systems

O.A.Voronov* and B.H.Kear **

*Diamond Materials, Inc., 120 Centennial Ave., Piscataway, NJ 08854-3908, oavoronov@aol.com

**Rutgers University, 607 Taylor Road, Piscataway, NJ 08854-8065, bkear@rci.rutgers.edu

ABSTRACT

Geothermal energy production is one of several proven technologies that promise to make a significant contribution to US energy independence within the next 20 years. In this research, we address the challenge of increasing the lifetimes of bearing components used in submersible pumps, which should improve operating efficiency and reduce well-production cost. Typically, a submersible-pump bearing is hardfaced with WC/Co or WC/Co-Cr composite. To enhance bearing performance, we have developed a new class of TiC/Ti composites, which resist corrosive wear in geothermal brine much better than WC/Co composites. In particular, diamond-hardfaced TiC/Ti composites experience no wear at all, even if sand is present in the brine. These new composites can be fabricated by hot pressing readily available powders under moderate pressures and temperatures, even when diamond is present. In contrast diamond-hardfaced WC/Co requires higher processing pressures and temperatures to prevent diamond graphitization. The TiC/Ti composites also reduce raw materials costs and avoid the use of strategic elements, such as W and Co.

Keywords: geothermal energy, submersible-pump bearing, titanium alloy, diamond hardfacing

1 INTRODUCTION

As shown in Table 1, Ti ore is abundant in the Earth's Crust, and proven deposits are located in Canada and USA. In contrast W and Co ores are of limited availability, with main deposits located in China and Zaire, respectively.

Ti-matrix alloys are more resistant to corrosion in salt water and hot corrosion in brine than Co or Co-Cr alloys, particularly when the brine contains H_2S, CO_2 and sulfate acids. TiC/Ti-matrix composites have lower friction coefficients and experience reduced wear compared with WC/Co-matrix composites. If the composite is additionally hardfaced with functionally-graded diamond the wear resistance is dramatically enhanced. Diamond-hardfaced TiC/Ti composites are also potential replacements for diamond-hardfaced WC/Co composites used in drill bits, designed for deep drilling of hard and medium-hard rock formations.

Ele-ment	Mass % in Earth's Crust	Deposits 1000 tons / Countries	Density, g/cm^3	Melting Point, ˚C	HB, MPa
W	0.007	1,815 / China	19.3	3,380	4,150
Co	0.002	3,000 / Zaire	8.9	1,490	1,550
Cr	0.03	1,800,000 / Kazakhstan	7.18	1,877	1,000
Ti	0.61	600,000 / N. America	4.5	1608	600

Table 1: Properties of elements relevant to present article.

New materials and composites used in wells encounter similar problems in both petroleum and geothermal industries [1]. State-of-the-art submersible pumps have operated in oil wells at temperatures up to 260°F, producing depths to 12,000 ft, with flow rates of 1,500 GpM at a submergence pressure of 3,500 psi. Oil well environments contain crude oil, water and brine fluids, as well as CH_4, CO_2 and H_2S gases. [2]

2 EXPERIMENTAL PROCEDURE

Samples of WC/Co, WC/CoCr and TiC/Ti composites, with and without functionally-graded diamond hardfacings, were fabricated by high-pressure sintering of powder compacts. Concentrations of metallic components were in the range 10-50 vol.% and concentrations of carbide or diamond components were in the range 90-50 vol.%.
Metal and carbide powders were mixed in a ball mill and cold compacted in a steel die under a pressure of 0.5 GPa. The resulting "green bodies" were sintered to full density using a high pressure/high temperature (HPHT) apparatus of novel design [3]. The apparatus consists of a high pressure (HP) unit, deformable-ceramic container, and reaction cell, Figure 1. Modifications to the HPHT unit enabled pressure ranges of P = 1-10 GPa, P = 0.3-3 GPa and P = 0.03-0.3 GPa [4].

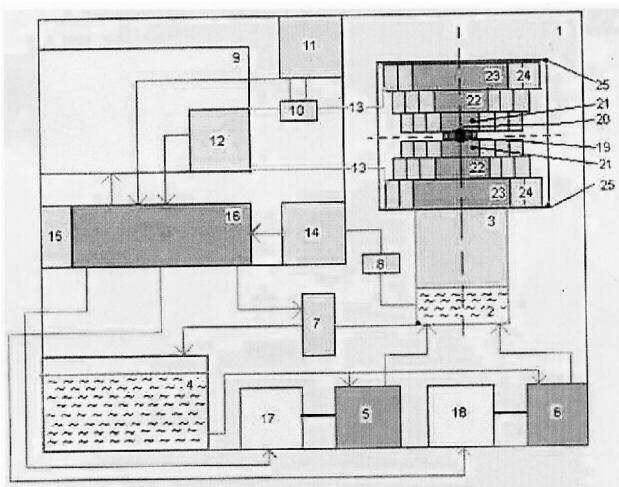

Figure 1: Schematic of High Pressure and High Temperature (HPHT) Apparatus: 1-frame, 2-cylinder, 3-ram, 4-oil tank, 5-primary pump, 6-secondary pump, 7-valve, 8-pressure gage, 9-power supply, 10-shunt, 11, 12-volt-meters for current and voltage values; 13-copper cables, 14-volt-meter for oil pressure value, 15-timer, 16-processor for pressure-temperature functions, 17, 18-electrical motors for primary and secondary pumps, 19-clay container, 20-HPHT cell with graphite heater and sample, 21-anvils, 22-WC/Co discs, 23-hardened steel discs, 24-supporting steel rings, 25-frame insulating layers.

The force (F) is provided by a ram inserted into the hydraulic cylinder and frame. A pump supplies oil to the cylinder under pressure P*. Area S* of the ram cross-section multiplied by pressure in the cylinder gives the value of force after deducting friction (F_{fr}) between the ram and cylinder:

$$F = P^* \cdot S^* - F_{fr} \quad (1)$$

The force is applied to the HP unit, which is inserted into the frame of the press. Pressure is generated in the HP unit as the deformable ceramic is squeezed by the anvils. Values of pressure in the center of the container can be approximated by formula (2):

$$P = F/(S + F/H) \quad (2)$$

where H is the micro-hardness of anvils (H=10 GPa for hardened steel and H=15 GPa for cermet), and S is effective area of container. Temperature is generated by resistively-heating a graphite crucible, which is inserted in the container. Values of temperature can be approximated by equation (3), if temperature is not too high:

$$T=T_0+kW \quad (3)$$

where T_0 is ambient temperature, W=UI is power of heater, k is a proportionality coefficient, U is voltage, and I is current. Equation (3) is valid when heat dissipation is mostly by thermal conductivity. At higher temperatures, when radiation becomes important, the value of the temperature is lower than that determined from equation (3). The dependences of pressure on force and temperature on power were calibrated using known phase transitions in materials, so these values could be determined with high precision.

All samples were sintered in graphite crucibles, using various pressures, temperatures and holding times at the peak sintering temperatures. After sintering to full density, the samples were machined and polished to determine hardness using a Buehler's Microhardness Tester (Micromet 2101) with loading force F = 25-1000 gf, and expressed in SI units (Pa).

Currently, we are making friction and wear measurements in geothermal brine. A special chamber has been built to carry out tilted-plane and pin-on-disc experiments, thus enabling friction at low and high speeds to be determined. Wear lifetimes are also being measured, thus providing needed information for the future design of high performance bearings. These results will be reported in a separate publication.

3 EXPERIMENTAL RESULTS

Table 2 shows that a TiC/Ti composite has higher hardness than known industrial composites based on WC/Co. It is noteworthy that toughness and impact strength are also greater at higher hardness.

Carbide	Density, g/cm^3	Hardness HV, GPa	Melting Point, ˚C
WC	15.7	17.2	2785
Cr_3C_2	6.68	18.0	1895
TiC	4.92	31.7	3257

Composite	Density, g/cm^3	Hardness HV, GPa	**Remarks**
WC/Co	13.66-15.02	9.0-13.1	*Industrial*
WC/CoCr	13.14-14.85	11.5-13.9	*Reported*
TiC/Ti	4.71-4.81	14.5-24.1	*Novel Composites*
TiC/Ti-D	3.92-4.32	30-60	

Table 2: Properties of carbides and composites.

In the case of diamond-hardfaced TiC/Ti composite, there is another advantage that relates to its processability. Co does not form a stable carbide phase, as is the case for Fe and Ni. When heated in contact with diamond, Co transforms diamond into graphite, if pressure corresponds to the stability range for graphite. This means that diamond is stable in contact with Co or CoCr at pressures 5-10 GPa and temperature ~1500°C. In contrast Ti and its alloys do not catalyze the transformation of diamond into graphite. Thus, we have been able to fabricate diamond-hardfaced TiC/Ti composites at moderate pressures (0.2-2.0 GPa) and temperatures (1000-1500K), lower than the melting point of Ti.

Figure 2 shows pressure-temperature region for conventional fabrication of diamond-hardfaced composites compared with novel procedure developed in this work. The diagram also shows a curve of equal thermodynamic potential for diamond and graphite that separates graphite-diamond stability range.

An important feature of the powder processing technology used to produce these new hardfaced composites is the application of high pressure sintering to obtain a functionally-graded diamond surface layer, which resists spallation even under extreme operating conditions. Figure 3 shows a schematic of the developed functionally-graded TiC/Ti-diamond composite, specifically designed for bearings in geothermal submersible pumps, Figure 4. Other applications include machine tools, drill bits and wear parts. The advantages derived from such a graded composite structure include higher hardness and compressive strength as well as improved fracture toughness.

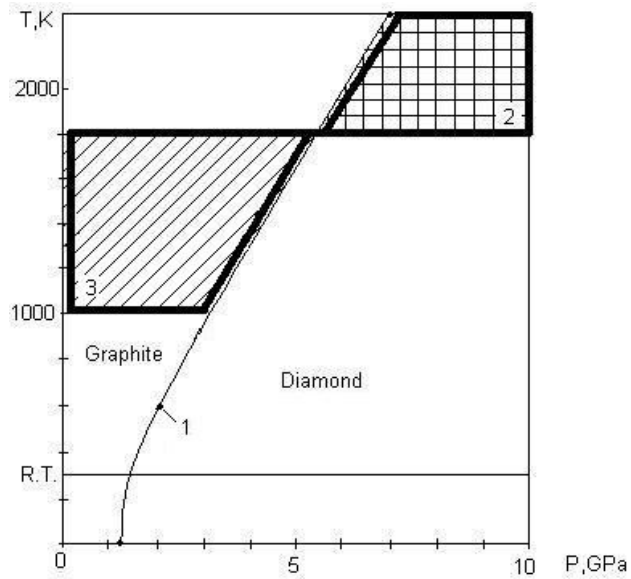

Figure 2: Pressure-temperature ranges to fabricate conventional diamond-hardfaced composites by known industrial methods and by novel reported procedure. The curve of equal thermodynamic potential of diamond and graphite separates graphite-diamond stability range on the P-T diagram. 1-curve of equal thermodynamic potential for graphite and diamond; 2-region for diamond-Co (Ni, Fe) alloy composite by industrial methods; 3-region for diamond-Ti alloy composite in present work.

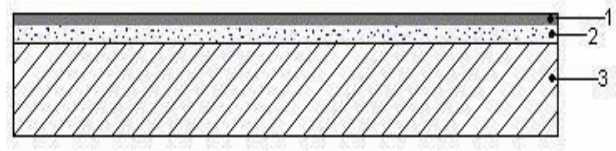

Figure 3: Schematic of developed functionally-graded TiC/Ti-diamond composite structure: 1- diamond hardfacing; 2- graded TiC/Ti-diamond composite; 3- TiC/Ti alloy substrate.

As described in reference [5], a typical three-phase submersible-pump motor, Figure 4, is filled with insulating oil to lubricate the bearings and to equalize pressure inside and outside of the motor in the well environment. Coupled

to the motor is a seal section to prevent ingress of water, brine, hydrocarbons and other contaminants into the motor. The centrifugal pump has several stages, with each stage comprising an impeller and diffuser. The diffuser picks up the fluid from the impeller, converts kinetic energy into pressure, and redirects the fluid into the impeller of the next stage. Bearings of such pumps and other high capacity pumps, with as many as 18-20 stages that operate in a similar way are encountered similar problems [6]. Geothermal energy production is one of several proven technologies that promise to make significant contributions to US energy independence within the next 20 years. In this research, we have addressed the challenge of increasing the lifetimes of geothermal-pump bearings, which should enhance well-operating efficiency and reduce energy production costs. The results to date have been encouraging.

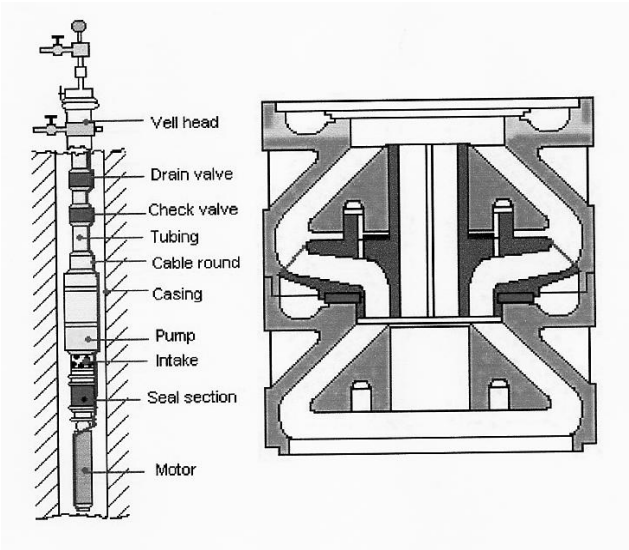

Figure 4: Design of a typical geothermal submersible pump.

4 CONCLUSIONS

Typically, submersible-pump bearings in geothermal systems are hardfaced with WC/Co or WC/Co-Cr composites. To enhance bearing performance, we have developed a new class of TiC/Ti composites, which resist corrosive wear in geothermal brine much better than WC/Co composites. In particular, diamond-hardfaced TiC/Ti composites experience no wear at all, even if sand is present in the brine. Because of the moderate pressures (0.2-2.0 GPa) and temperatures (1000-1500 K) ranges used for powder consolidation almost any desired size or shape of finished part can be fabricated using today's hot pressing equipment. Hence, many other applications for these new materials can be contemplated, such as drill bits, mining equipment, and machine tools.

An important aspect of this new technology is the ability to process TiC/Ti/diamond composites, including hardfacings and bulk materials, at moderate pressures and temperatures without inducing graphitization of the diamond. In contrast WC/Co/diamond composites require higher processing pressures and temperatures to prevent diamond graphitization. The TiC/Ti composites also reduce raw materials costs and avoid the use of strategic elements, such as W and Co.

Acknowledgement

The authors wish to thank DoE for financial support (Grant Number DE-FG02-08ER85139)

REFERENCES

[1] J.E. Vandevier "Commercial Uses of Geothermal Heat: Electrical submersible pumps in geothermal environments" Geothermal Resources Council Special Reports, p.113-116June 1980.

[2] J.W.Lund, G.Culver, P.J.Lienau "Groundwater Characteristics and Corrosion Problems Associated with the Use of Geothermal Water in Klamath Falls, Oregon",Geothermal Resources Council, Trans. V.1, p.197-198, May 1977 (ISSN: 0193-5933)

[3] O.A. Voronov "High Pressure and High Temperature Apparatus", US Patent 6,942,729, Sept.13, 2005; Priority Aug.21, 2000

[4] O.A.Voronov, G.S.Tompa, B.H. Kear,"High Pressure-High Temperature Device for making Diamond Materials", Diamond Materials, VII ECS PV2001-25, p. 264-271, 2001

[5] "Submersible pump handbook", 2nd Ed., Centrilift, Inc., 1978.

[6] B.L.Hopper "Reliability Improvements in Deepsetting Lineshaft Pumps for Geothermal Service", Geothermal Resources Council, Trans. V.11, p.419-423, Oct. 1987 (ISNN: 0193-5933)